TEFCOLD®
Cool Products Worldwide

# Gastro-Line Upright Cabinets

# Users manual

| | |
|---|---|
| EN | 1 |
| DE | 11 |
| DK | 21 |
| SV | 31 |
| FR | 41 |
| IT | 51 |
| ES | 61 |
| PT | 71 |
| RUS | 81 |


## Models:

BF-P Series
BK-P Series
IF-P Series
RF-P Series
RK-I Series
RK-P Series

# CONTENTS


1. Users manual

Important safety instructions ..... 4
Unpacking and installation ..... 4
Electrical connection ..... 5
Start-up of the cabinet ..... 5
Door reversal ..... 6
Thermostat ..... 8
Defrosting ..... 9
Maintenance and optimization of energy efficiency ..... 9
Service ..... 9
Disposal ..... 9
Electrical circuit diagramme..... 91

2. Thermostat technical manuals

Dixell XW20LRH ..... 92
Dixell XW60LRH ..... 97

# IMPORTANT SAFETY INSTRUCTIONS

1. To get the best out of your cabinet, read these instructions thoroughly.
2. The user is responsible for correct use of the cabinet in accordance with instructions.
3. Contact your dealer immediately in the event of faults.
4. Place cabinet in a dry, well ventilated room.
5. Do not place close to sources of heat or in direct sunlight.
6. NB: all electrical appliances can be hazardous.
7. Do not store explosive substances such as gas, petrol, ether or the like in the cabinet.
8. No asbestos or CFC has been used in manufacture.
9. The compressor oil does not contain PCB.

ONLY FOR APPLIANCES WITH REFRIGERANT R290/R600a!

This appliance contains a flammable refrigerant, so make sure of good ventilation around the appliance. Do not use mechanical devices when defrosting, this can cause leakage of the cooling system. Do not use electrical appliances inside the refrigerated storage compartment.

Any repair of the appliance should be carried out by a skilled technician (EN 60335-2-89: 2010).

## Important !

The base of this cabinet is designed for storage of hermetically sealed containers containing processed food (EN 16825).

# UNPACKING AND INSTALLATION

Remove the wooden pallet and the packing. External surfaces are supplied with a protection foil, which must be removed before installation.

To ensure correct function it is important that the cabinet is level. If the cabinet is supplied with legs, these can be adjusted.

If you want to build in your cabinet please note the following:

1. There must be at least 15 cm free space above the cabinet in order for the cooling system to work satisfactorily.
2. There must be sufficient space at the hinge side to clean and replace the shelves and clean around the hinge.

# ELECTRICAL CONNECTION

The cabinet operates on 220-240 V/50 Hz.

The wall socket should be easily accessible.

All earthing requirements stipulated by the local electricity authorities must be observed. The cabinet plug and wall socket should then give correct earthing. If in doubt, contact your local supplier or authorized electrician.

The main electrical connections must be done by skilled electricians.

# START-UP OF THE CABINET

Before use, we recommend that the cabinet is cleaned, see the section on maintenance and cleaning.

## Important !

If the cabinet has been horizontally placed during transport, please wait 2 hours before starting up the cabinet.

Remember to remove the transport safety device on the compressor. Remove the whole bar as shown in fig. 1.8.

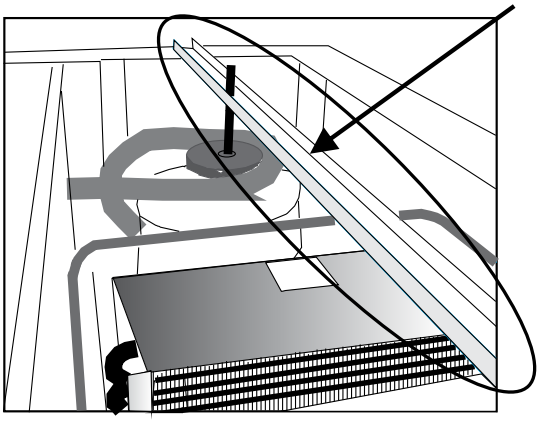

# DOOR REVERSAL

NOTE that the following procedure must be made with the door open!

Open the top by removing the screws shown in fig. 1.2.

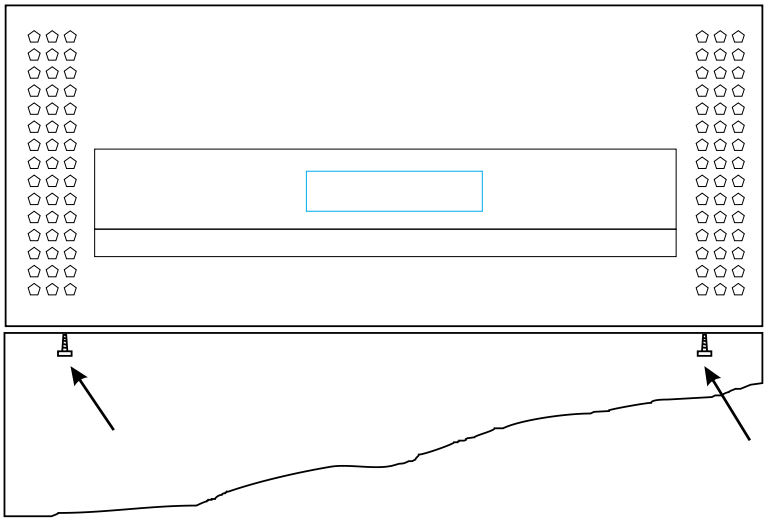

Remove lock screw in door spring as shown in fig. 1.3. Loosen the hinge and remove the door.

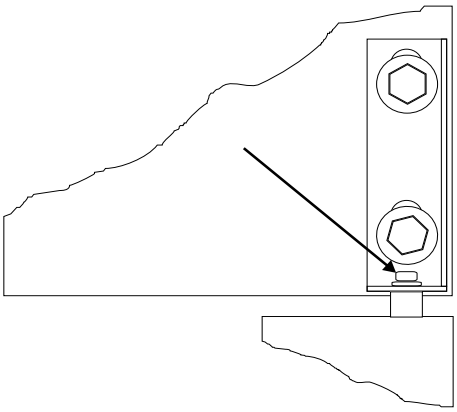

The door is placed horizontally and the door spring and bottom bush are reversed as in fig. 1.4.

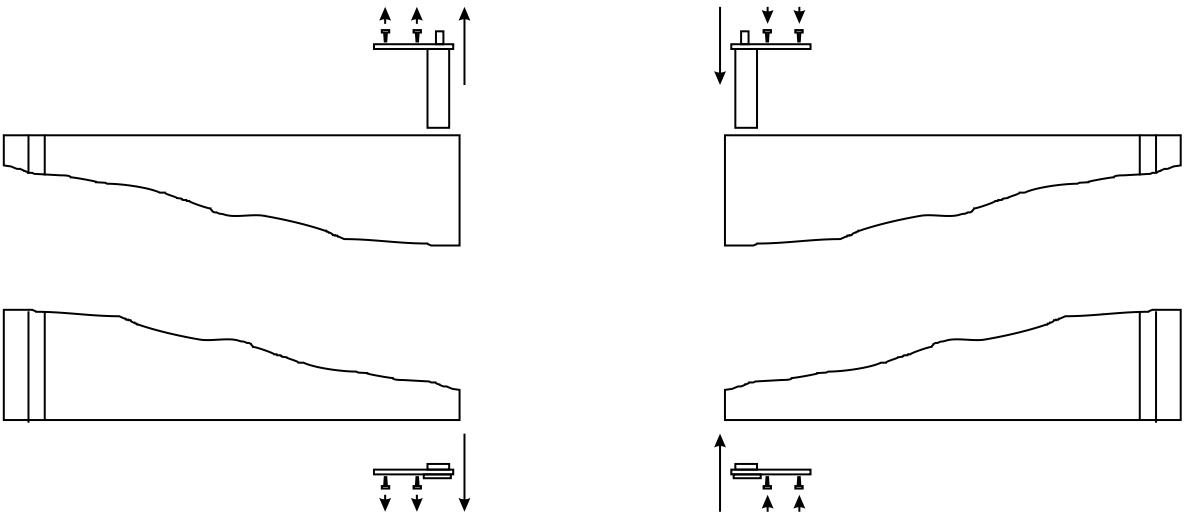

The bottom hinge is reversed by demounting the front legs/wheels and mount them in the other side of the cabinet as in fig. 1.5

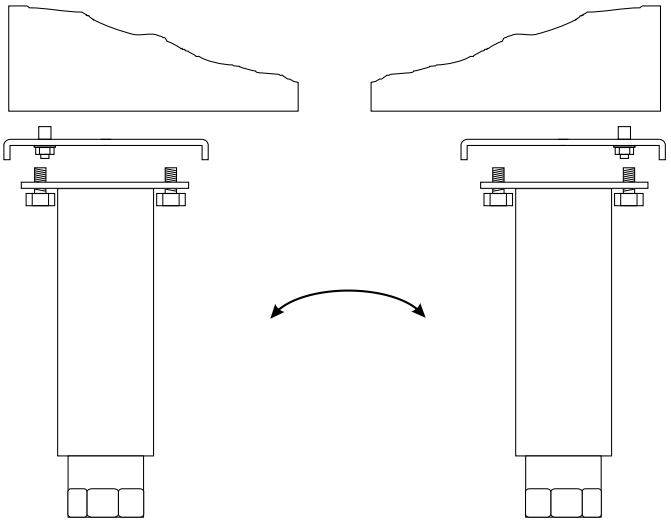

Loosen the top hinge in the new hinge side and replace the door on the bottom hinge. The hinge is pressed downwards on the door spring and is fastened. Put in the lock screw as in fig. 1.6

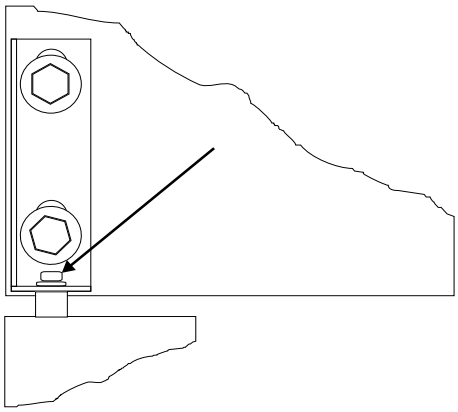

Close and fasten the top with screws as in fig. 1.7.

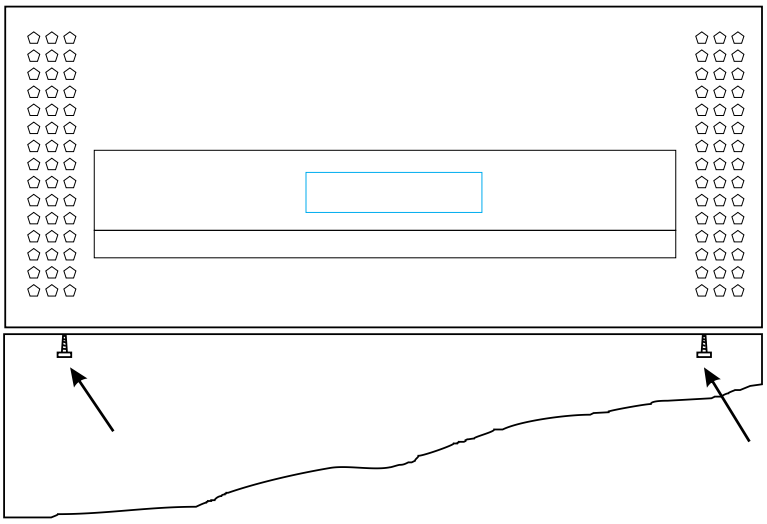

# THERMOSTAT

The thermostat is placed in the control panel.

The thermostat has been pre-set and in most cases it is not necessary to adjust the settings.

When turning on the cabinet the display will show the current temperature in the cabinet.

**Display set temperature:**

SET Press this key and the display will show the set temperature. Press the key again to return to normal reading

**Set new temperature:**

SET Press this key continuously for more than 3 seconds and the display shows the set temperature. (The ‘°C’ LED is flashing)

△ Press this key to increase the set temperature.

▽ Press this key to lower the set temperature.

SET Press this key to save the new settings. The display will flash with the new value and will then return to normal reading.

**Keyboard lock/unlock:**

△+▽ Press these keys simultaneously for 5 seconds. To lock the display reads ‘PoF’.
To unlock the display reads ‘Pon’.

**Alarm codes:**

‘P1’ Flashing in the display: indicates that the cabinet sensor is defective.

‘P2’ Flashing in the display: indicates that the evaporator sensor is defective.

# CHANGING OF PARAMETERS

See table of parameters from page 92.

# DEFROSTING

The cabinet defrosts automatically with pre-set intervals. If the door to the cabinet is opened or the contents of the cabinet is changed frequently it may become necessary to defrost the cabinet manually.

Pressing this key continuously for more than 3 seconds will start a manual defrosting and then return to normal operation.

Defrosted water runs to a container placed in the compressor compartment and evaporates.

# CLEANING AND MAINTENANCE

Switch off the electrical connection at the socket.

The cabinet must be periodically cleaned. Clean the external and internal surfaces of the cabinet with a light soap solution and subsequently wipe dry.
Do not spray the appliance with direct jets of water or using high pressure appliances.
Do NOT use cleansers containing chlorine or other harsh cleansers, as these can damage the surfaces and the internal cooling system.
Clean the condenser and the compressor compartment using a vacuum cleaner and a stiff brush.

# SERVICE

The cooling system is a hermetically sealed system and does not require supervision, only cleaning.

If the cabinet fails to cool, check if the reason is a power cut.

If you cannot locate the reason to the failure of the cabinet, please contact your supplier. Please inform model and serial number of the cabinet. You can find this information on the rating label which is placed inside the cabinet in the top right hand side.

# DISPOSAL

Disposal of the cabinet must take place in an environmentally correct way. Please note existing regulation on disposal. There may be special requirements and conditions which must be observed.

rfj_200509

Specifications subject to changes without prior notification.
TEFCOLD A/S, Industrivej 25, DK-8800 Viborg

© TEFCOLD A/S 2020

TEFCOLD®
Cool Products Worldwide

# Gastro-Line Kühlschränke

# Betriebsanleitung

| | |
|---|---|
| DE | 11 |
| DK | 21 |
| SV | 31 |
| FR | 41 |
| IT | 51 |
| ES | 61 |
| PT | 71 |
| RUS | 81 |


## Modelle:

BF-P Serie
BK-P Serie
IF-P Serie
RF-P Serie
RK-I Serie
RK-P Serie

# INHALT


1. Allgemeine Information

Wichtige Sicherheitsvorschriften ..... 14
Aufstellen ..... 14
Anschließen ..... 15
Einschalten ..... 15
Wechseln des Türanschlages ..... 16
Temperaturregelung ..... 18
Abtauen ..... 19
Reinigung und Optimierung der Energieeffizienz ..... 19
Wartung und Kundendienst ..... 19
Entsorgung ..... 19
Schaltpläne ..... 91

2. Thermostat Technische Bedienungsanleitung

Dixell XW20LRH ..... 92
Dixell XW60LRH ..... 97

# WICHTIGE SICHERHEITSVORSCHRIFTEN

1. Vor Inbetriebnahme des Gerätes machen Sie sich bitte mit der Gebrauchanweisung insbesondere der Sicherheitsvorschriften vertraut.
2. Bei Zuwiderhandlung gegen diese oder fahrlässigem Gebrauch übernimmt der Anwender des Produktes die Haftung für eventuell dadurch entstehende Sach- sowie Personschäden.
3. Im Falle einer Störung kontaktieren Sie bitte daher umgehend Ihren Fachhändler.
4. Platzieren Sie den Schrank an einem trockenen Standort.
5. Der Schrank darf nicht in der Nähe von Hitzeabstrahlenden Geräten platziert werden. Vermeiden Sie Standorte mit direktem Sonnenlicht.
6. Bitte denken Sie daran, dass alle elektrischen Geräte gefährlich sein können.
7. Bewahren Sie keine explosiven Stoffe wie z.B. chemische Verdünnungsmittel und Benzin in diesem Gerät auf.
8. Wir erklären, dass kein Asbest noch CFC im Aufbau verwendet worden ist.
9. Das Öl im Kompressor enthält nicht PWB.

Der Kühlschrank enthält das energieeffiziente und nicht ozonabbauende Kältemittel R600a/R290. Weil R600a/R290 ein sehr brennbares Gas ist, muss unbedingt darauf geachtet werden, dass der Kühlschrank im Transport und bei der Installation nicht beschädigt wird. Wenn der Kühlschrank doch beschädigt wird, darf kein offenes Feuer in der Nähe vom Schrank verwendet werden. In dem Fall darf der Schrank auch nicht Strom zugeschlossen werden. Sorgen Sie außerdem für eine gute Entlüftung vom Raum. Bei Zweifel kontaktieren Sie bitte sofort Ihren Lieferanten.

## Wichtig!

Der Boden dieses Kühlgeräts ist für hermetisch verschlossene Behälter bestimmt, die verarbeitete Lebensmittel enthalten (EN 16825).

# AUFSTELLUNG

Der Schrank wird auf einer Holzpalette für sicheren Transport geliefert. Entfernen Sie diese und stellen Sie den Schrank in einer geraden/waagrechten Position auf.

# ANSCHLIEβEN

Das Gerät hat eine Spannung von 220-240 V/50 Hz.

Der Stecker muss geerdet sein (Schuko).

Sollten Sie das Kabel ersetzen müssen, benutzen Sie unbedingt ein entsprechendes geerdetes Kabel.

Bitte beachten Sie, dass der Anschluss lediglich durch einen erfahrenen Elektriker erfolgen darf.

Wenn der Kabel beschädigt ist sollte es bei entweder der Hersteller oder ein Service Vertreter ersetzt werden um Gefahr zu vermeiden.

# EINSCHALTEN

Es empfiehlt sich das Gerät vor Inbetriebnahme zu reinigen  (Näheres unter „Reinigen“).

## Wichtig!

Wenn der Schrank liegend geliefert ist, warten Sie 2 Stunden vor Einschalten.
Bitte erinnern Sie die Transportsicherung auf dem Kompressor zu entfernen. Die ganze Stange entfernen wie auf Figure:

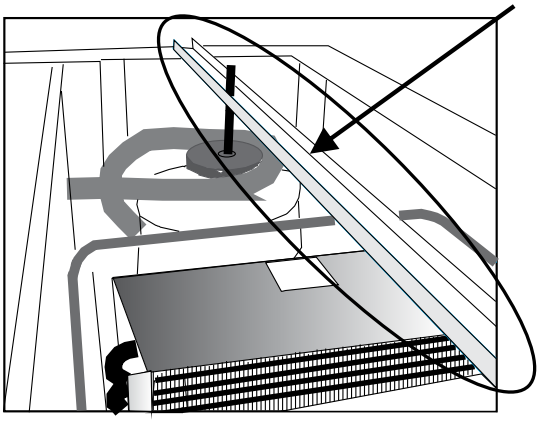

# WECHSELN DES TÜRANSCHLAGES

Wichtig! Die Tür muss geschlossen werden, wenn der Türanschlag gewechselt wird!

Öffnen Sie das Top um die in Fig. 1.2 markierte Schrauben zu entfernen.

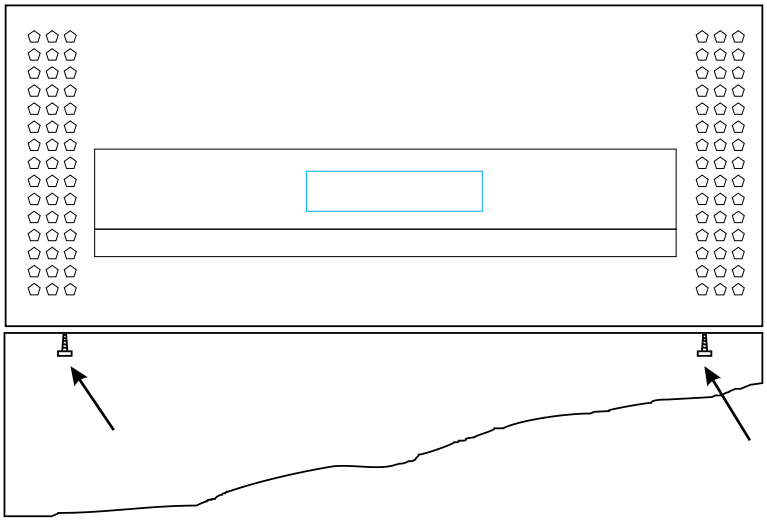

Entfernen Sie die Schlossschraube in der Türfeder, wie in Fig. 1.3 markiert. Danach lösen sie das Türscharnier und heben die Tür aus.

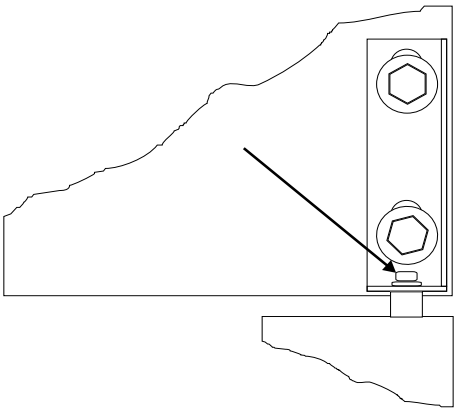

Legen Sie die Tür in der horizontaler Position und wechseln Sie die Türfeder und die Bodenbusche, siehe Fig. 1.4.

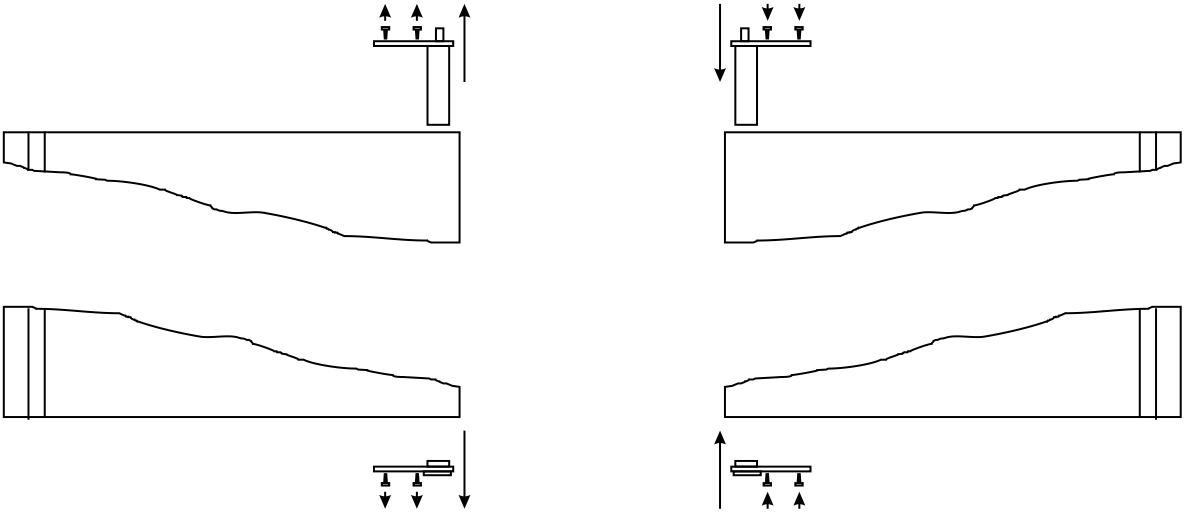

Um das Bodenscharnier zu wechseln muss man die vorne Stellschrauben/Rollen abmontieren und danach das Scharnier in der anderen Seite montieren, siehe Fig. 1.5.

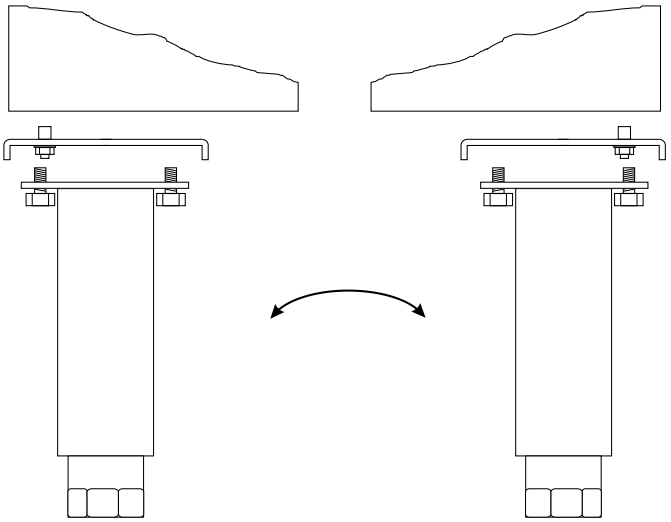

Lösen Sie das Obenscharnier in der neuen Scharnierseite und heben sie die Tür wieder auf das Bodenscharnier auf. Drücken Sie das Scharnier auf der Türfeder und festmachen. Setzen Sie die Schlossschraube ein (siehe Fig. 1.6).

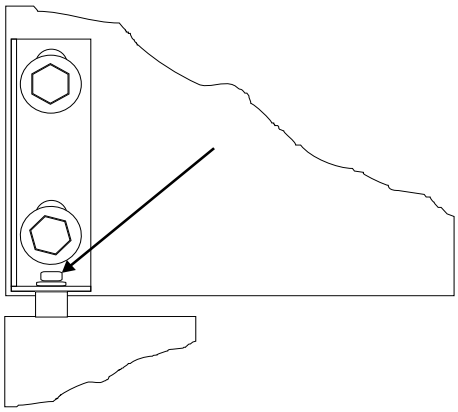

Das Top zumachen und mit Schrauben festmachen. Siehe Fig. 1.7.

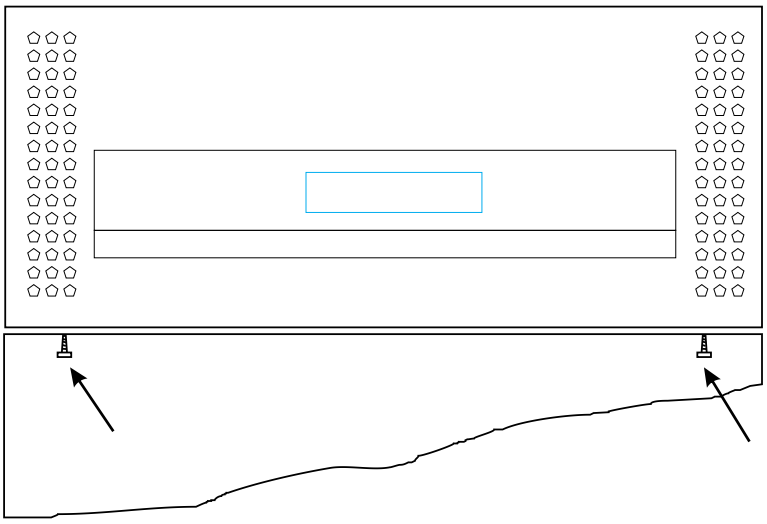

# TEMPERATURREGELUNG

Der Thermostat befinden sich in der Bodenplatte.

Der Regler ist voreingestellt für den Schrank und normalerweise es ist nicht notwendig die Einstellung zu regulieren.
Bei Anschließen zeigt das Display die aktuelle Temperatur im Schrank.

**Eingestellt Temperatur gezeigt:**

SET Drücken Sie auf diesen Taster und Display zeigt die eingestellte Temperatur. Nochmal drücken um normale Temperatur zu zeigen .

**Neue Temperatur einstellen:**

SET Drücken Sie auf diesen Taster mehr als 3 Sekunden und Display zeigt die eingestellt Temperatur. (Die ‘°C’ LED blinkt)

△ Drücken Sie auf diesen Taster um die eingestellte Temperatur zu erhöhen.

▽ Drücken Sie auf diesen Taster um die eingestellte Temperatur zu senken.

SET Drücken Sie auf diesen Taster um die neue Einstellung zu lagern. Display blinkt mit den neuen Wert und geht zurück zu der normalen Funktion.

**Tastaturschloss:**

△+▽ Drücken Sie gleichzeitig auf diese Tasten für 5 Sekunden um die Tastatur zu verschliessen (Display zeigt „Pof“) oder um aufzuschliessen ( Display zeigt ’Pon’).

**Störungsanzeigen:**

‘P1’ Erscheint in Display: bedeutet das der Raumsensor defekt ist.

‘P2’ Erscheint in Display: bedeutet das der Verdampfersensor defekt ist.

# ÄNDERUNG DER PARAMETER

Siehe Parameterübersicht vom Seite 92.

# ABTAUEN

Der Schrank wird in vorprogrammierten Intervallen automatisch abgetaut. Falls der Schrank mit häufigen Öffnungen von Tür order häufige Auswechseln von Gefriergut äußerst belastet wird es ist vielleicht notwendig der Schrank manuell abzutauen.

Drücken Sie auf diesen Taster mehr als 3 Sekunden fängt die manuellen Abtauung statt, und dann zu normalen Betrieb zurückkehren.

Tauwasser zur Verdampfung wird in einen Behälter im Kompressorraum abgelassen.

# REINIGUNG UND OPTIMIERUNG DER ENERGIEEFFIZIENZ

Der Schrank auf Steckdose ausschalten.

In regelmäßigen Zwischenräumen den Schrank reinigen mit mildem Geschirrspülmittel innen und außen. Alles mit einem Tuch gut trocken.

Verwenden Sie keine säurehaltige Putz- und chemische Lösungsmittel, diese möchten Rostfraß auf die oberflächen und Innenkühlsystem verursachen.

Kondensator und das übrige Kompressorraum mit Staubsauger reinigen und eine steife Bürste.

Achten Sie darauf, dass kein Wasser im Kompressorraum und in de elektrischen Teile kommt, das Kurzschluss verursachen kann

# WARTUNG UND KUNDENDIENST

Das Kühlsystem ist ein hermetisches geschlossenes System und fordert kein Besichtigung nur Reinigung.
Bei Ausfall der Kühlung prüfen Sie ob der Netzstecker richtig in der Stockdose ist und die Sicherung der Stockdose in Ordnung ist.
Wenn keine Ursachen vorliegen und Sie die Störung nicht selbst beseitigen konnten, wenden Sie sich bitte an die Kundendienststelle. Teilen Sie die Typenbezeichnung und Seriennummer mit. Diese Informationen finden Sie auf den Typenschild in Schrank an der rechten Seite oben.

# ENTSORGUNG

Wenn der Schrank ausgedient hat, muss die Entsorgung durch eine anständig umweltmäßige Wiese vorgenommen werden. Beachten Sie die Vorschriften für Entsorgung. Es gibt z.B. Spezialforderungen und Bedingungen zu beachten.

rfj_200509

Specifications subject to changes without prior notification.
TEFCOLD A/S, Industrivej 25, DK-8800 Viborg

© TEFCOLD A/S 2020

TEFCOLD®
Cool Products Worldwide

# Gastro-Line Køleborde

# Brugsvejledning

| | |
|---|---|
| DK | 21 |
| SV | 31 |
| FR | 41 |
| IT | 51 |
| ES | 61 |
| PT | 71 |
| RUS | 81 |


## Modeller:

BF-P Series
BK-P Series
IF-P Series
RF-P Series
RK-I Series
RK-P Series

# INDHOLD


1. Brugsvejledning

Vigtige informationer og energi besparende anbefalinger ..... 24
Udpakning og opstilling ..... 24
El-tilslutning ..... 25
Opstart ..... 25
Vending af dør ..... 26
Termostaten ..... 28
Afrimning ..... 29
Vedligeholdelse ..... 29
Service ..... 29
Bortskaffelse ..... 29
El-diagrammer ..... 91

2. Termostater tekniske manualer

Dixell XW20LRH ..... 92
Dixell XW60LRH ..... 97

# VIGTIGE INFORMATIONER OG ENERGI BESPARENDE ANBEFALINGER

1. For at få det fulde udbytte af kølemøblet, bør De læse denne brugsvejledning igennem.
2. Det er brugers ansvar at anvende kølemøblet i henhold til instruktionerne.
3. Kontakt omgående forhandleren, såfremt der opstår fejl ved kølemøblet.
4. Kølemøblet bør anbringes i et tørt og tilstrækkeligt ventileret rum.
5. Kølemøblet bør ikke placeres i nærheden af varmekilder eller direkte sollys.
6. Varme drikke og madvarer bør køles ned inden de placeres i kølemøblet.
7. Væsker bør opbevares i tildækkede beholdere for ikke at få luftfugtigheden til at stige i kølemøblet og få køletiden til at forøges.
8. Åbne døre og skuffer så kortvarigt som muligt.
9. Kontrollere at døre og skuffer lukker tæt og rengør tætningslisterne jævnligt.
10. Bemærk at alle elektriske apparater kan medføre farer.
11. Opbevar ikke eksplosionsfarlige stoffer, f.eks. gas, benzin, æter og lignende.
12. Der er ikke brugt asbest eller CFC i konstruktionen.
13. Olien i kompressoren indeholder ikke PCB.

Kølemøblet indeholder det energirigtige og ikke ozonnedbrydende kølemiddel R600a/R290. Da R600a/R290 er en brandfarlig gasart, er det vigtigt, at kølekredsløbet ikke beskadiges under transport og ved installering.

Hvis kølekredsløbet alligevel beskadiges, skal du undgå at bruge åben ild i nærheden af køleskabet, ligesom der heller ikke må tilsluttes strøm til skabet. Sørg desuden for god udluftning i rummet. Er du i tvivl, skal du kontakte din leverandør.

## Vigtigt !

Bunden af dette kølemøbel er velegnet som opbevaringsareal af hermetisk lukkede beholdere med forarbejdede fødevarer (EN 16825).

# UDPAKNING OG OPSTILLING

Produktet leveres emballeret, undersøg denne for skader inden udpakning.

# EL-TILSLUTNING

Kølemøblet er beregnet for tilslutning til 220-240 V/50 Hz. Tilslutningen skal ske ved en stikkontakt, der bør være let tilgængelig.

Dette kølemøbel skal ekstrabeskyttes ifølge stærkstrømsreglementet. Dette gælder også, selvom der er tale om udskiftning af et eksisterende kølemøbel, der ikke har været ekstrabeskyttet. I bygninger opført før 1. april 1975 er ekstrabeskyttelsen i orden, hvis der er installeret HFI-afbryder, som beskytter den stikkontakt kølemøblet skal tilsluttes.

I begge disse tilfælde skal der, hvis stikkontakten er for trebenet stikprop, benyttes en trebenet stikprop, og lederen med grøn/gul isolation skal tilsluttes jordklemmen (mærket ).

Hvis stikkontakten kun er for tobenet stikprop, benyttes en tobenet stikprop. Hvis brugeren selv monterer denne, skal lederen med grøn/gul isolation klippes af så tæt som muligt på det sted, hvor lederen går ind i stikproppen.

I alle andre tilfælde bør De lade en autoriseret el-installatør undersøge, hvordan De nemmest får ekstrabeskyttet kølemøblet. Hvis De ikke har ekstrabeskyttelse i bygningen i forvejen, anbefaler Elektricitetsrådet, at De lader el-installatøren opsætte en PFI- eller HPFI afbryder.

# OPSTART

Inden kølemøblet tages i brug, anbefales det at rengøre dette, se afsnit om vedligeholdelse.

## Vigtigt !

Hvis kølemøblet har ligget ned under transport, vent 2 timer før opstart.
Husk at fjerne transportsikring på kompressor, fjern hele stangen som vist i fig. 1.8.

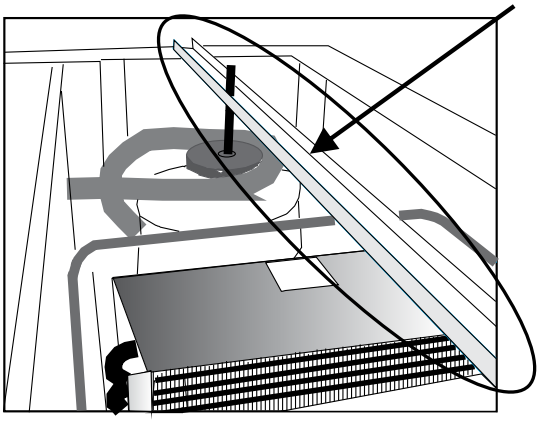

# VENDING AF DØR

HUSK dette skal foretages når døren er åben !

Åben toppen ved at fjerne markerede skruer i fig. 1.2.

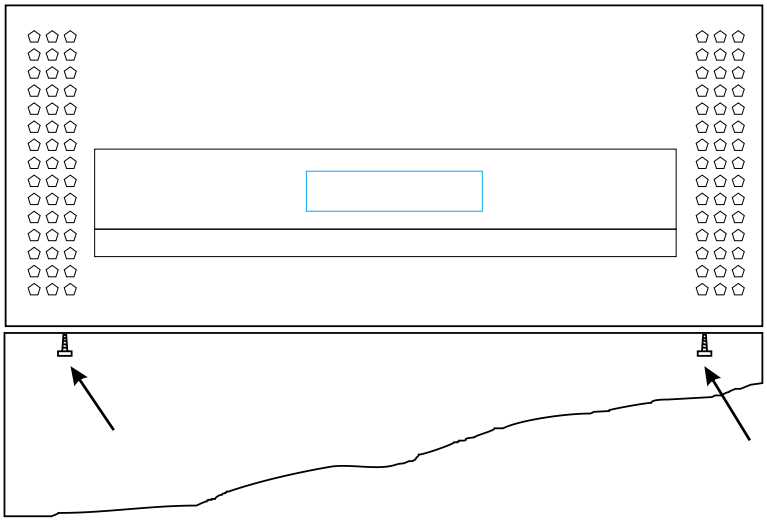

Fjern låseskrue i dørfjeder, markeret i fig. 1.3, hængslet løsnes og døren løftes af.

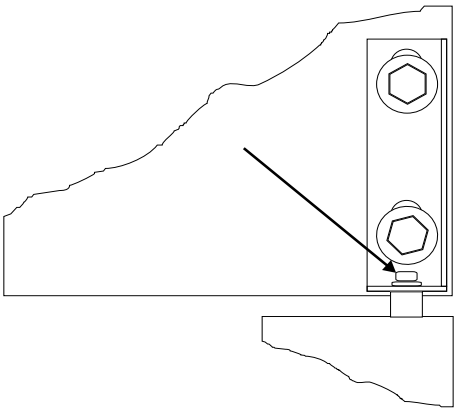

Døren ligges ned hvorefter dørfjederen og bund-bøsningen ombyttes, se fig. 1.4.

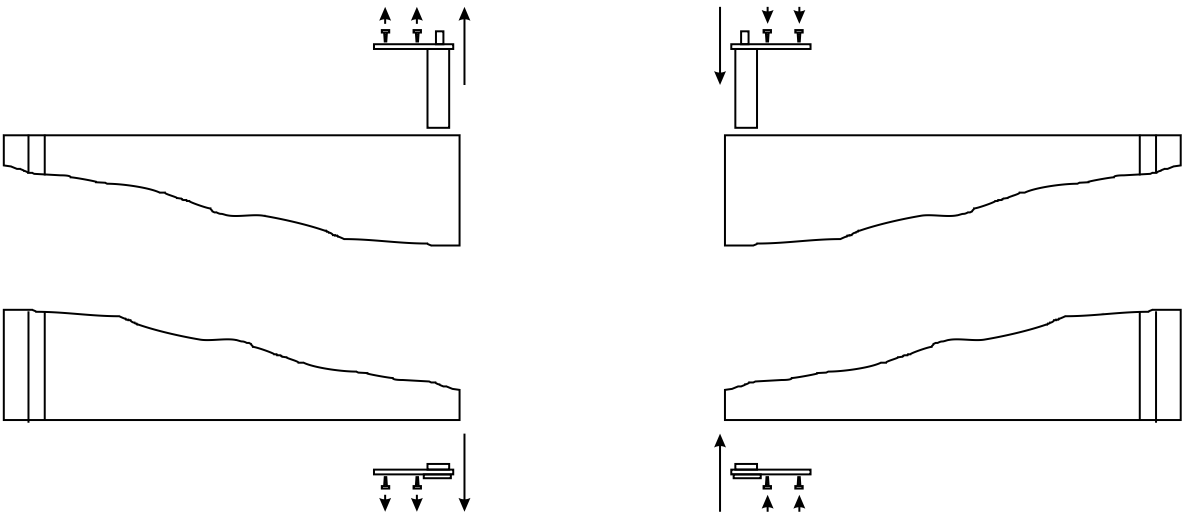

Bundhængsel flyttes ved at afmontere de forreste ben/hjul og derefter montere i modsatte side, se fig. 1.5.

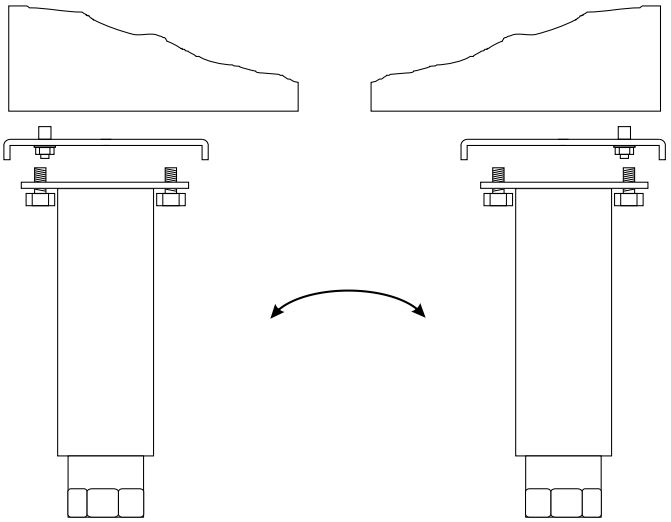

Tophængsel i ny hængselside løsnes og døren løftes på plads på bundhængsel. Hængsel trykkes ned på dørfjeder og fastgøres. Isæt låseskrue se fig. 1.6.

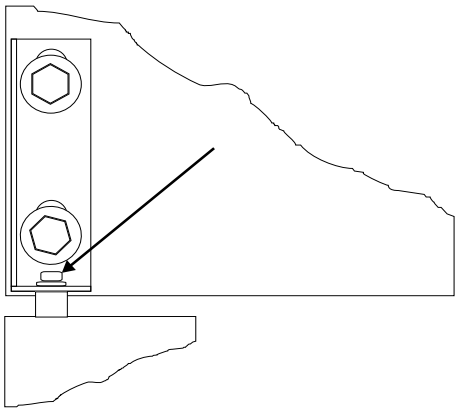

Luk og fastgør top med skruer se fig. 1.7.

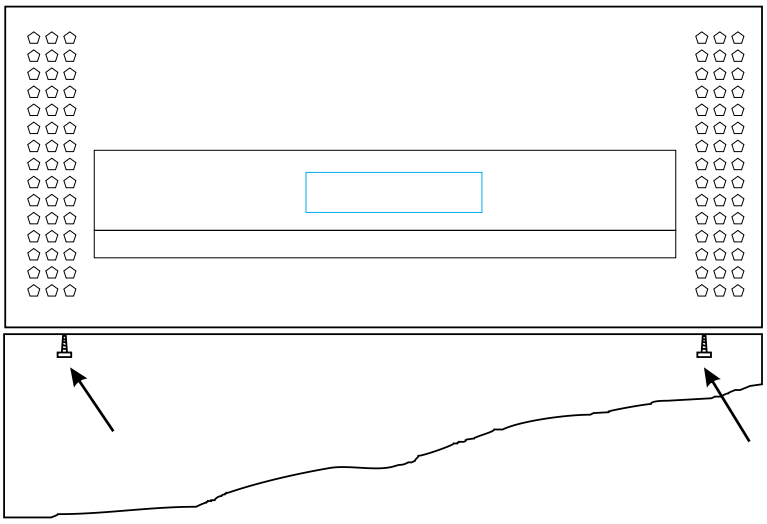

# TERMOSTATEN

Termostaten er placeret i sidepanelet

Termostaten er for-programmeret så kølemøblet er klar til brug. Hvis der skal justeres i indstillinger følg denne vejledning.
Når skabet tændes vil display vise den aktuelle temperatur i møblet.

**Vis indstillet temperatur:**

SET Tryk på denne tast og display viser den indstillede temperatur, tryk igen for at vende tilbage til normal visning.

**Indstil ny temperatur:**

SET Tryk på denne tast i mere end 3 sec. og display viser den indstillede temperatur. (‘°C’ LED blinker)

△ Tryk på denne tast for at hæve den indstillede temperatur..

▽ Tryk på denne tast for at sænke den indstillede temperatur.

SET Tryk på denne tast for at gemme den nye indstilling, display blinker med den nye værdi og vender derefter tilbage til normal visning.

**Tastatur lås:**

△+▽ Tryk på disse 2 taster samtidigt i 5 sekunder for at låse/åbne tastaturet.
Lås tastatur (Display viser „Pof“) eller åbne tastatur ( Display viser ’Pon’).

**Fejlkoder:**

‘P1’ Blinker i display, betyder at rumføler er defekt.

‘P2’ Blinker i display, betyder at fordamperfæler er defekt.

# ÆNDRING AF PARAMETRE

Se parameter oversigt og manualer fra side 92.

# AFRIMNING

Kølemøblet afrimer automatisk med forprogrammerede intervaller. Hvis møblet belastes ekstremt med hyppige åbninger af dør eller hyppig udskiftning af varer, kan det blive nødvendigt at udføre en manuel afrimning.

Tryk på denne tast i mere end 3 sec., dette vil starte en manuel afrimning og derefter vende tilbage til normal drift.

Tøvand ledes ud til fordampning i en beholder, der er placeret i kompressorrum.

# VEDLIGEHOLDELSE

Afbryd kølemøblet på stikkontakten.
Med passende mellemrum skal kølemøblet rengøres. Udvendig og indvendige rengøring foretages med svag sæbeopløsning og aftørres grundigt.
Rengøringsmidler må IKKE indeholde klor, klorforbindelser eller andre aggresive midler, da de kan forårsage tæringer på overflader og på det indvendige kølesystem.
Ventilationsristen  holdes bedst rent ved hjælp af en støvsuger og en stiv børste.

# SERVICE

Kølesystemet er et hermetisk lukket system og kræver ikke tilsyn, kun renholdelse.

Ved svigt i kølevirkningen, undersøg om årsagen er afbrydelse i stikkontakt eller sikringsgruppe.

Kan grunden til svigt ikke findes, må De henvende Dem til Deres leverandør. Ved al henvendelse bedes De oplyse skabets typenavn og serienummer. Disse oplysninger findes på typenummerskiltet placeret indvendigt i højre side.

# BORTSKAFFELSE

Når det udtjente kølemøbel skal bortskaffes, skal det ske på en miljømæssig forsvarlig måde. Vær opmærksom på reglerne for bortskaffelse. Der kan være særlige krav og betingelser, der skal overholdes.

rfj_200509

Specifications subject to changes without prior notification.
TEFCOLD A/S, Industrivej 25, DK-8800 Viborg

© TEFCOLD A/S 2020

TEFCOLD®
Cool Products Worldwide

# Gastro-Line Kylbänker

# Bruksanvisning

| | |
|---|---|
| SV | 31 |
| FR | 41 |
| IT | 51 |
| ES | 61 |
| PT | 71 |
| RUS | 81 |


## Modeler:

BF-P Series
BK-P Series
IF-P Series
RF-P Series
RK-I Series
RK-P Series

# INNEHÅL


1. Allmänna anvisningar

Viktiga anvisningar ..... 34
Uppackning och uppställning ..... 34
Elanslutning ..... 35
Driftsstart ..... 35
Vända dörren ..... 36
Termostaten ..... 38
Avfrostning ..... 39
Underhåll och optimering av energieffektivitet ..... 39
Service ..... 39
Bortskaffande ..... 39
Elscheman ..... 91

2. Teknisk handbok för termostat

Dixell XW20LRH ..... 92
Dixell XW60LRH ..... 97

# VIKTIGA ANVISNINGAR

1. Läs den här bruksanvisningen så att du får bästa möjliga nytta av kylskåpet.
2. Det är användarens ansvar att använda kylskåpet enligt anvisningarna.
3. Kontakta återförsäljaren omgående om det uppstår fel på kylskåpet.
4. Kylskåpet bör placeras i ett torrt rum med god ventilation.
5. Kylskåpet bör inte placeras i närheten av värmekällor eller i direkt solljus.
6. Observera att alla elektriska apparater kan innebära fara.
7. Förvara inte explosionsfarliga ämnen som t.ex. gas, bensin eter eller liknande.
8. Ingen asbest och inga freoner (CFC) har använts vid konstruktionen.
9. Oljan i kompressorn innehåller inte PCB.

Kylen innehåller det energigodkända och icke ozonnedbrytande kylmedlet R600a/R290. R600a/R290 är en brandfarlig typ av gas och det är därför viktigt att kylkretsloppet inte skadas under transport och installering.

Om kylkretsloppet trots detta skadas ska man undvika att använda öppen eld i närheten av kylen och enheten får heller inte anslutas till strömuttag. Sörj dessutom för god ventilation i rummet. Vid tveksamhet: kontakta din leverantör.

## Viktigt !

Basen i detta kylskåp är konstruerad för hermetiskt förseglade behållare som innehåller färdiglagad mat (EN 16825).

# UPPACKNING OCH UPPSTÄLLNING

Kontrollera att det inte finns några skador på emballaget före uppackning.

# ELANSLUTNING

Kylskåpet är beräknat för anslutning till 230 V/50 Hz. Anslutningen ska göras med en stickkontakt som bör vara lätt åtkomlig.

Detta kylskåp ska extraskyddas enligt starkströmsbestämmelserna. Detta gäller också även vid utbyte av ett befintligt kylskåp som inte haft sådant extraskydd.

Använd alltid jordade stickkontakter med tre ledare. Kabelledaren med grön/gul isolering ska jordas (märkt ).

I alla övriga fall hänvisas till behörig elektriker som kan informera om hur apparaten ges extra skydd. Om byggnaden saknar extra skydd rekommenderar vi att en elektriker installerar en jordfelsbrytare (PFI eller HPFI).

# DRIFTSSTART

Innan kylskåpet tas i bruk ska det rengöras. Se avsnittet om underhåll.

## Viktigt !

Om kylskåpet har legat ner under transporten ska du vänta två (2) timmar innan det startas.
Ta bort transportsäkringen på kompressorn genom att ta bort hela stången enligt fig. 1.8.

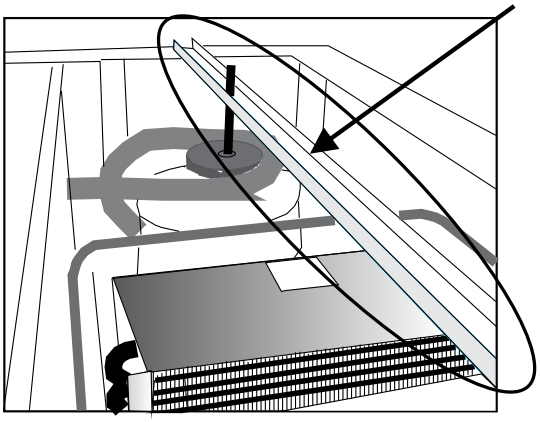

# VÄNDA DÖRREN

KOM IHÅG att detta ska göras medan dörren är öppen!

Öppna toppen genom att ta bort de markerade skruvarna i fig. 1.2.

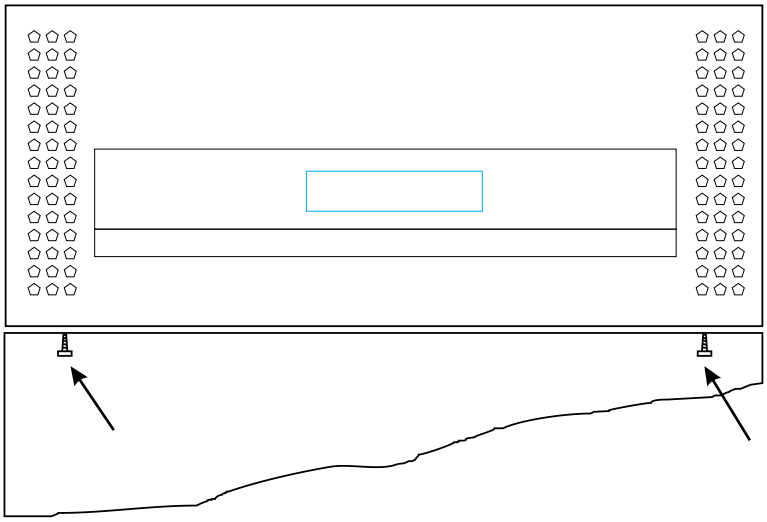

Ta bort låsskruvarna i dörrfjädern, markerade i fig. 1.3, lossa sedan gångjärnet och lyft av dörren.

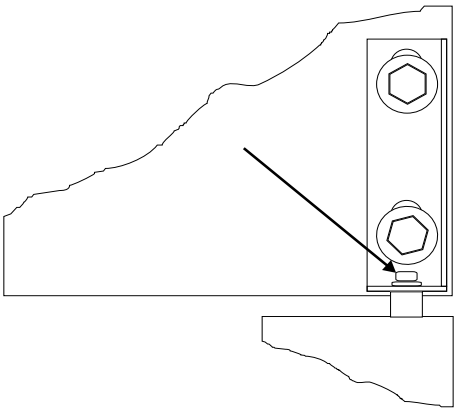

Lägg ned dörren och växla sedan dörrfjädern och nedre bussningen, se fig. 1.4.

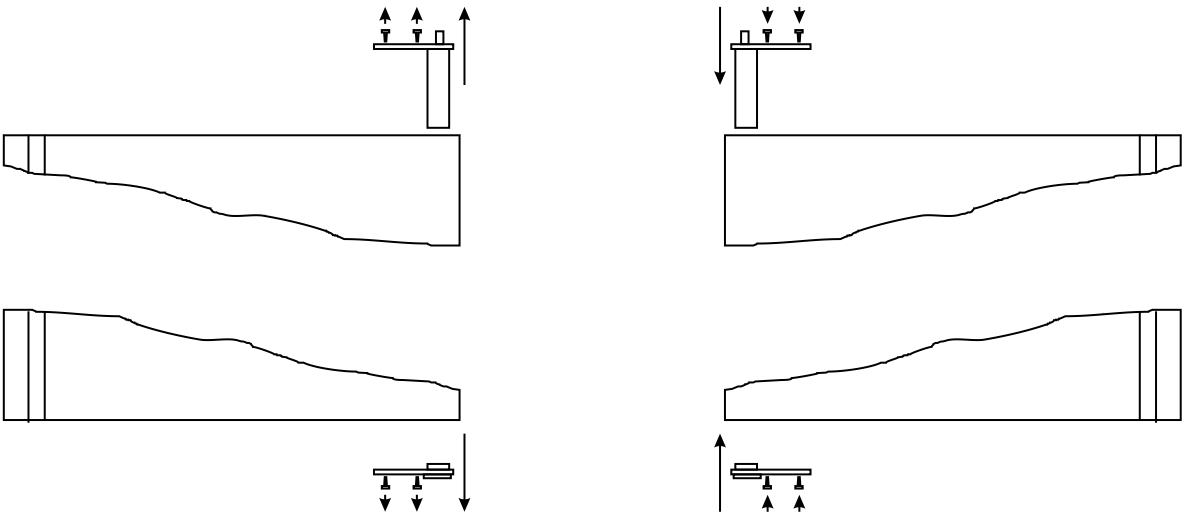

Nedre gångjärnet ska flyttas genom att demontera de främre benen/hjulen och därefter montera på motsatta sidan, se fig. 1.5.

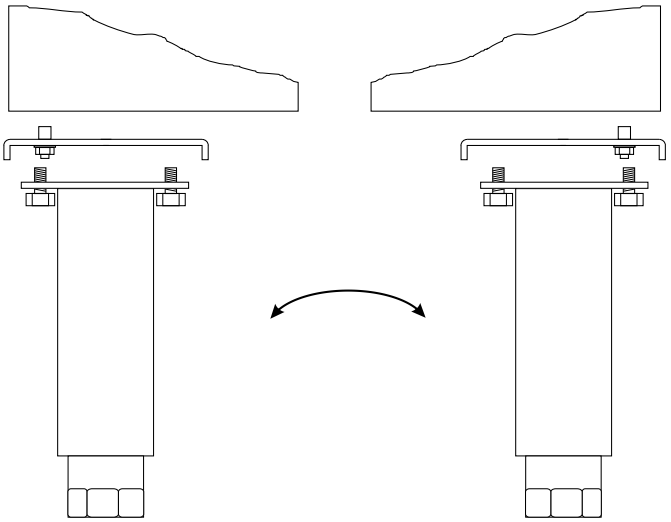

Lossa sedan övre gångjärnet på den nya gångjärnssidan och lyft dörren på plats på nedre gångjärnet. Tryck ner gångjärnet på dörrfjädern och fäst det. Sätt in låsskruvarna (se fig. 1.6)

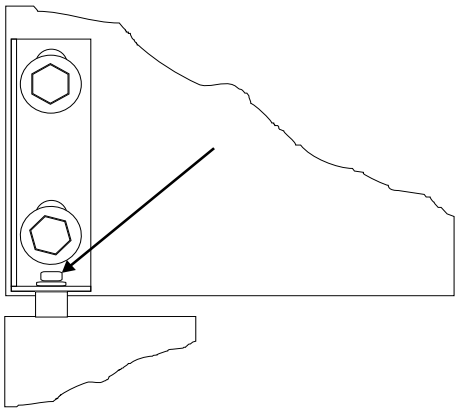

Lås fast och fäst med skruvarna (se fig. 1.7).

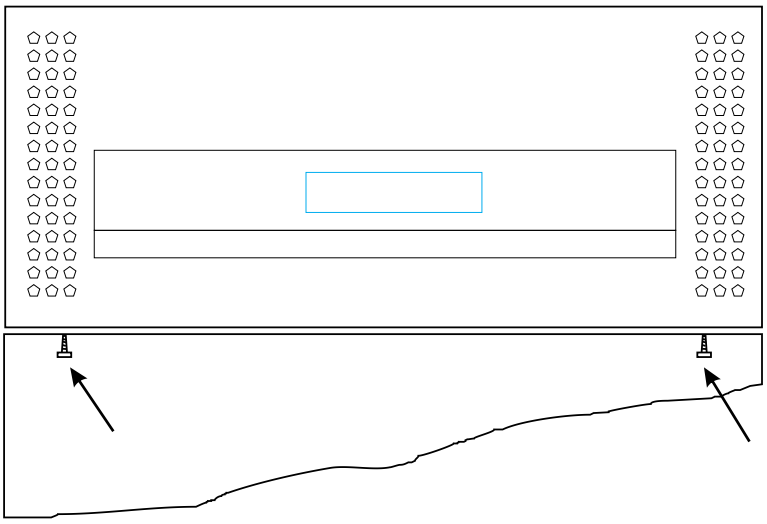

# TERMOSTATEN

Termostaten är placerad i teknik dörr.

Termostaten är förprogrammerad för skåpet, och oftast behöver inga inställningar justeras.

När skåpet startas kommer displayen att visa den aktuella temperaturen i skåpet.

**Visa inställd temperatur:**

SET Tryck på den här knappen så visar displayen den inställda temperaturen. Tryck på nytt för att återvända till normal visning.

**Ställa in ny temperatur:**

SET Tryck på den här knappen i minst tre (3) sekunder så visar displayen den inställda temperaturen. (‘°C’ LED blinkar)

△ Tryck på den här knappen för att höja temperaturen.

▽ Tryck på den här knappen för att sänka temperaturen.

SET Tryck på den här knappen för att spara den nya inställningen. Det nya värdet blinkar på displayen och därefter återgår displayen till normal visning.

**Knapplås:**

△+▽ Tryck på dessa knappar samtidigt i fem (5) sek för att låsa, displayen visar ’Pof’ om du ska låsa upp visar displayen ’Pon’.

**Felkoder:**

‘P1’ Blinkande display betyder att skåpets rumstemperaturgivare är defekt.

‘P2’ Blinkande display betyder att skåpets förångningsgivare är defekt.

# ÄNDRA PARAMETRARNA

Se parameteröversikt på sida 92.

# AVFROSTNING

Skåpet avfrostas automatiskt enligt förprogrammerade intervall. Om skåpet belastas extremt mycket med återkommande öppningar av dörren eller återkommande byte av innehållet kan en manuell avfrostning bli nödvändig.

Tryck på den här knappen i minst tre (3) sekunder. Då startar den manuella avfrostningen och därefter återgår skåpet till normal drift.

Smältvatten leds ut till förångning i en behållare som sitter i kompressorutrymmet.

# UNDERHÅLL

Bryt strömmen till kylskåpet genom att dra ut stickkontakten.

Kylskåpet ska rengöras med lämpliga mellanrum. Utvändig och invändig rengöring ska utföras med en svag tvållösning (milt diskmedel) och därefter ska skåpet torkas av noggrant.

Rengöringsmedel får INTE innehålla klor, klorföreningar eller andra aggressiva medel eftersom de kan orsaka skador på ytorna och på det interna kylsystemet.

Ventilationsgallret ska rengöras med dammsugare och en styv borste.

# SERVICE

Kylsystemet är ett hermetiskt slutet system och kräver ingen tillsyn – endast rengörning.

Vid dålig kylverkan: kontrollera först om orsaken är ett avbrott i stickkontakten eller proppskåpet.

Kontakta återförsäljaren om det inte går att lokalisera felet. Vi ber dig alltid uppge skåpets typbeteckning och serienummer vid alla kontakter med oss. Informationen sitter på skåpets insida, på märkskylten överst på högra sidan.

# BORTSKAFFANDE

Ett uttjänt kylskåp måste bortskaffas på ett miljömässigt försvarbart sätt. Var uppmärksam på vilka regler som gäller för bortskaffande. Det kan finnas särskilda krav och bestämmelser som måste följas.

rfj_200509

Specifications subject to changes without prior notification.
TEFCOLD A/S, Industrivej 25, DK-8800 Viborg

© TEFCOLD A/S 2020

TEFCOLD®
Cool Products Worldwide

# Gastro-Line Comptoirs

# Mode d' emploi

## Model:

BF-P Série
BK-P Série
IF-P Série
RF-P Série
RK-I Série
RK-P Série


| | |
|---|---|
| FR | 41 |
| IT | 51 |
| ES | 61 |
| PT | 71 |
| RUS | 81 |

# SOMMAIRE


1. Informations générales

Instructions importantes ..... 44
Désassemblage et mise en place ..... 44
Branchement électrique ..... 45
Démarrage ..... 45
Inversement de la porte ..... 46
Thermostat ..... 48
Dégivrage ..... 49
Maintenance et optimisation de l'efficacité énergétique ..... 49
Service ..... 49
Élimination ..... 49
Schéma électrique ..... 91

2. Manuel technique du thermostat

Dixell XW20LRH ..... 92
Dixell XW60LRH ..... 97

# INSTRUCTIONS IMPORTANTES

1. Avant d'utiliser votre armoire, nous vous recommandons de lire ce mode d'emploi dans son entier.
2. C'est la responsabilité de l'utilisateur  de manier l'appareil selon les instructions données.
3. Contacter votre revendeur immédiatement en cas de défauts de fonctionnement de l'armoire.
4. L'armoire doit être placée dans un endroit sec et ventilé.
5. L'armoire ne doit pas être exposée aux rayons du soleil ou à tout autre source de chaleur.
6. N'oublier pas que tous les appareils électriques sont des sources de danger potentiel.
7. Ne conserver pas et n'utilisez pas des produits qui pourraient provoquer des explosions ou qui sont inflammables, tels que gaz, briquets, essence, éther etc. dans l'armoire.
8. Aucune asbeste ou CFC est utilisée dans la construction de l'armoire.
9. L'huile dans le compresseur ne contient pas de PCB.

POUR LES ARMOIRES AVEC RÉFRIGÉRANT R290/R600a!

Ce refroissseur contient un réfrigérant inflammable; assurez un endroit bien ventilé autour de l'armoire. N'utilisez pas des outils mécaniques pour le dégivrage; cela peut causer des fuites dans le système de refroidissement interne. N'utilisez pas des outils électrique á l'intérieur de l'armoire.

Chaque réparation de ce réfroidisseur doit être effectué par un réparateur professionel. (EN 60335-2-89: 2010)

## Important !

La base de ce réfrigérateur est conçue pour les récipients hermétiques contenant des aliments transformés (EN 16825).

# DÉSASSEMBLAGE ET MISE EN PLACE

L'armoire est livrée avec une palette en bois afin de l'assurer pendant le transport. Enlever la palette et placer l'armoire d'une position verticale. Les surfaces extérieures sont équippées d'un film pelable, qu'il faut enlever avant la mise en place.

Lors de la mise en place, l'armoire doit être de niveau, ce qui s'obtient aisément grâce aux pieds réglables. (Quelques armoires sont livrées avec roulettes au lieu de pieds réglables).

# BRANCHEMENT ÉLECTRIQUE

L'armoire doit  être branchée par une prise d'un accès facile avec la tension de 230 V/50 Hz.

Les installations électriques doivent être effectués par un électricien spécialisé.

# DÉMARRAGE

Avant d'utiliser votre armoire, nous vous recommandons de la nettoyer, voir la section « entretien ».

## Important !

Si l'armoire a été transportée aux horizontal, il faut attendre 2 heures après l'installation pour démarrer l'appareil.
N'oublier pas d'enlever la protection du compresseur ; enlever le bâton entier (figure 1.8).

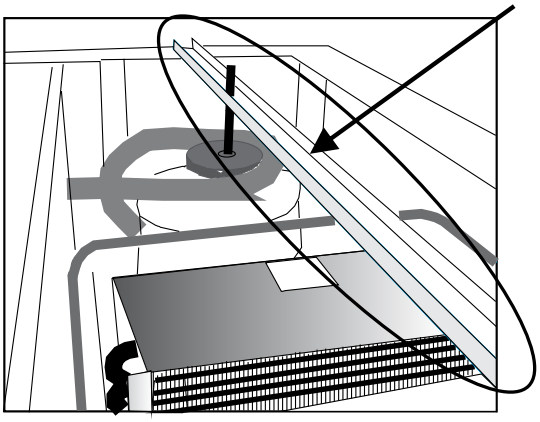

# INVERSEMENT DE LA PORTE

N’oublier pas de fermer la porte avant de l’inverser.

Ouvrir le dessus de l’armoire en demontant les vis (figure 1.2).

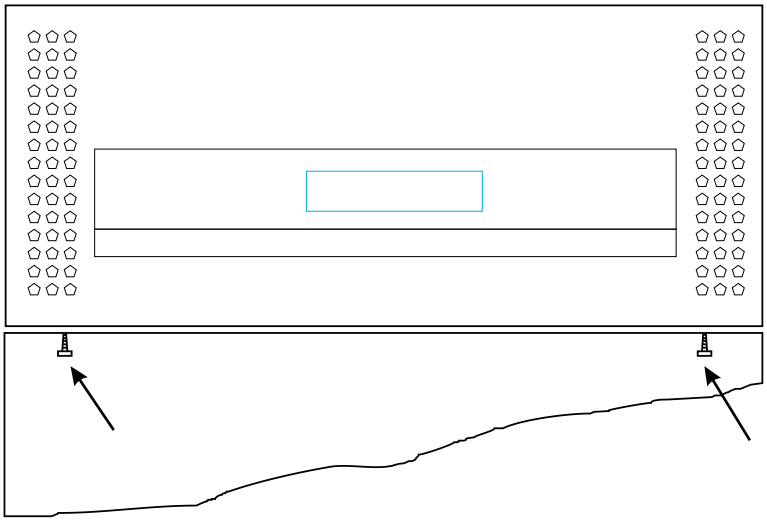

Demonter le vis de blocage dans le ressort de la porte (figure 1.3), la charnière s’est lâchée et vous pouvez demonter la porte.

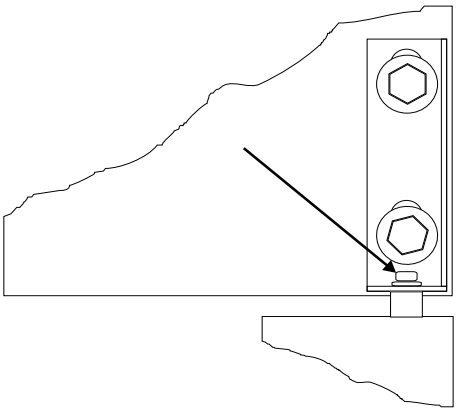

Mettre la porte aux horizontal. Échanger le ressort de la porte et la boîte de fond (figure 1.4).

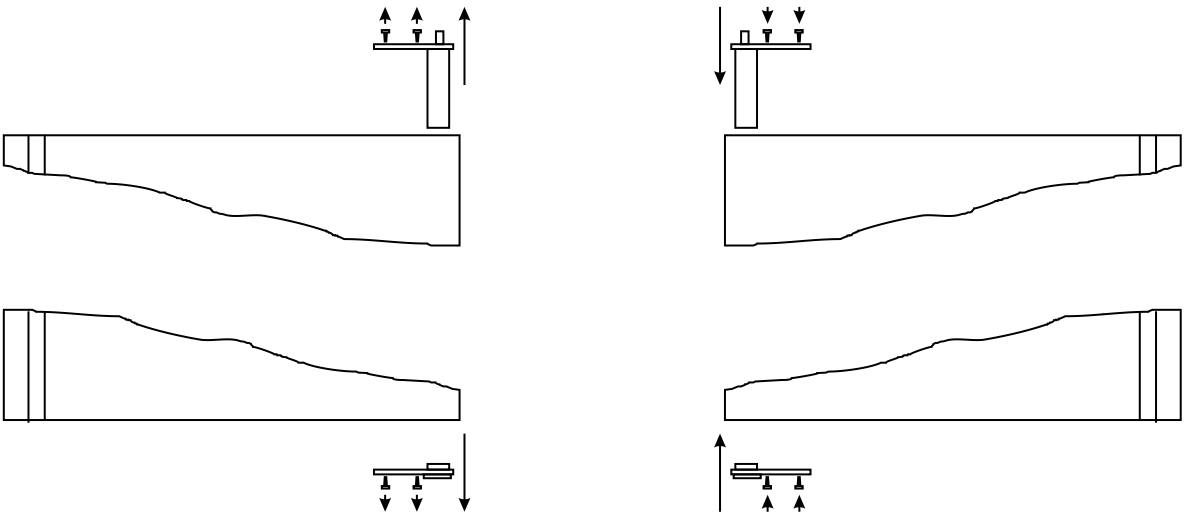

La charnière de fond est déplacée en demontant les pieds/roulettes de devant, et puis les monter au côté opposé (figure 1.5).

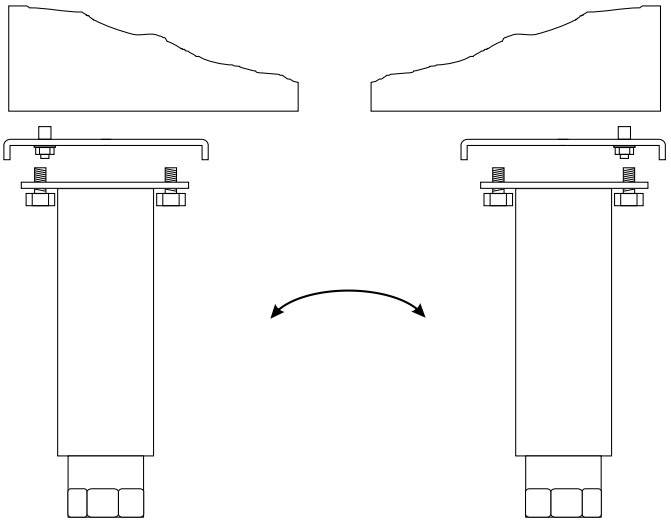

Lâcher la charnière dessus au nouveau côté charnière et monter la porte sur la charnière de fond. Presser la charnière sur le ressort de la porte et fixer-là. Monter le vis de blocage (figure 1.6)

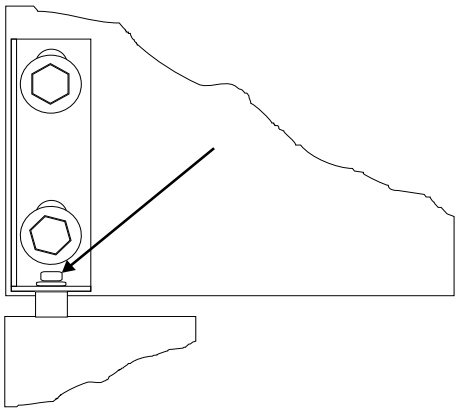

Fermer et fixer le dessus avec les vis (figure 1.7).

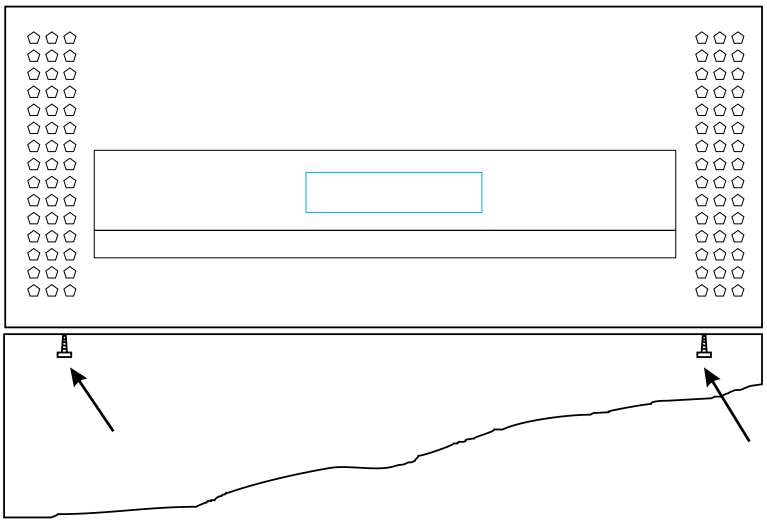

# THERMOSTAT

Le thermostat est placé dans le panneau de contrôle .

Il est préprogrammé pour l'armoire ; dans la plupart des cas il est donc inutile de le régler.

Quand l'armoire est allumée, l'afficheur va montrer la température actuelle à l'intérieur de l'armoire.

**Montrer la température réglée:**

SET Presser ce bouton et l'afficheur montre la température réglée, presser encore une fois pour retourner à l'indication normale.

**Régler la nouvelle température:**

SET Presser ce bouton pendant plus de 3 secondes, et l'afficheur montre la température réglée. (Le symbole '°C' clignote)

△ Presser ce bouton pour augmenter la température réglée.

▽ Presser ce bouton pour baisser la température réglée.

SET Presser ce bouton pour garder le nouveau réglage, l'afficheur clignote avec la nouvelle température, puis il retourne à l'indication normale.

**Serrure de clavier :**

△+▽ Presser ces boutons simultanément pendant 5 secondes pour bloquer, l'afficheur montre « Pof » ou pour débloquer, l'afficheur montre « Pon ».

**Codes d'érreurs:**

'P1' Clignotant dans l'afficheur signifie que la sonde du thermostat est défectueuse.

'P2' Clignotant dans l'afficheur signifie que la sonde de l'évaporateur est défectueuse.

# CHANGEMENT DES PARAMÈTRES

Voir table des paramètres page 92.

# DÉGIVRAGE

L’armoire se dégivre automatiquement avec des intervalles programmés. Si l’armoire est exposée aux ouvertures de la porte ou remplacements des marchandises très fréquents, un dégivrage manuel peut être nécessaire.

Presser ce bouton pendant plus de 3 secondes ; cela va lancer un dégivrage manuel et après retourner au fonctionnement normal.

L’eau de dégivrage est évacuée et s’évapore dans un récipient placé dans le compartiment compresseur.

# ENTRETIEN

Débrancher l’armoire pendant le nettoyage.

Le nettoyage de l’intérieur et l’extérieur de l’armoire doit être effectué par intervalles convenables à l’aide d’un produit à vaisselle non parfumé. L’armoire doit être essuyée minutieusement après le nettoyage. L’extérieur peut être maintenu avec un produit (creme, huile) pour l’inox.

N’utiliser pas des produits à vaisselle chlorés ou d’autres produits aggrésifs, parce qu’ils pourraient causer la corrosion de l’acier inox et du système frigorifique interne.

# SERVICE

Le système frigorifique est étanche à l’air ; il n’est donc pas nécesssaire de le surveiller, il suffit de le nettoyer.

Si l’armoire ne rafraîchit pas, vérifier que la fiche est bien enfoncée, que la fusible est intact et qu’il n’y a pas de coupure de courant.

Si vous ne pouvez pas trouver la cause du défaut, contacter votre revendeur. Informer la référence et le numéro de série de l’armoire, ce que vous pouvez trouver à l’intérieur de l’armoire sur l’étiquette placée en haut à droite.

# ÉLIMINATION

Quand l’armoire usée doit être éliminée, il doit se passer d’une manière qui ne compromet pas l’environnement. Veuillez prendre note des règles d’élimination et examiner s’il existe des demandes et conditions spécifiques qu’il faut respecter.

rfj_200509

Specifications subject to changes without prior notification.
TEFCOLD A/S, Industrivej 25, DK-8800 Viborg

© TEFCOLD A/S 2020

TEFCOLD®
Cool Products Worldwide

# Gastro-Line Banconi

# Manuale d'uso

## Modello:

BF-P Series
BK-P Series
IF-P Series
RF-P Series
RK-I Series
RK-P Series


| | |
|---|---|
| IT | 51 |
| ES | 61 |
| PT | 71 |
| RUS | 81 |

# SOMMARIO


1. Informazioni generali

Importanti nozioni di sicurezza ..... 54
Rimozione dell'imballaggio e installazione ..... 54
Collegamenti elettrici ..... 55
Inizializzazione dell'armadio ..... 55
Capovolgimento delle porte ..... 56
Termostato ..... 58
Sbrinamento ..... 59
Manutenzione e ottimizzazione dell'efficienza energetica ..... 59
Assistenza ..... 59
Smaltimento ..... 59
Schema elettrico ..... 91

2. Manuel technique du thermostat

Dixell XW20LRH ..... 92
Dixell XW60LRH ..... 97

# INSTRUCCIONES DE SEGURIDAD IMPORTANTES

1. Para obtener el máximo rendimiento del armario, recomendamos la lectura de este manual de instrucciones.
2. Es responsabilidad del usuario utilizar el electrodoméstico de acuerdo con las instrucciones facilitadas.
3. Póngase en contacto inmediatamente con su concesionario en caso de cualquier anomalía.
4. Coloque el armario en un lugar seco y ventilado.
5. Mantenga el armario alejado de fuentes de mucho calor y no lo exponga a la luz solar directa.
6. Tenga siempre en cuenta que todos los dispositivos eléctricos pueden ser el origen de peligros potenciales.
7. No almacene materiales inflamables como disolvente, gasolina, etc., en el armario.
8. Declaramos que no se ha usado amianto ni CFC en su construcción.
9. El aceite del compresor no contiene PCB.

SOLO PER APPARECCHI CON REFRIGERANTE R290/R600a!

Questo apparecchio contiene un refrigerante infiammabile: assicurarsi che vi sia una buona ventilazione intorno all'apparecchio. Non utilizzare dispositivi meccanici in fase di scongelamento per evitare perdite del sistema di raffreddamento. Non utilizzare dispositivi elettrici all'interno del vano di conservazione refrigerato.

Qualsiasi riparazione dell'apparecchio deve essere svolta da un tecnico qualificato (EN 60335-2-89: 2010).

## Importante

La base di questo frigorifero è stata progettata per contenitori a chiusura ermetica contenenti cibi pronti (EN 16825).

# DESEMBALAJE E INSTALACIÓN

Retire el palet de madera y el embalaje. Las superficies exteriores llevan una lámina de protección que se debe retirar antes de la instalación.

# COLLEGAMENTI ELETTRICI

L’apparecchio è adatto a 230 V/50 Hz. Il collegamento deve essere effettuato attraverso una presa accessibile.

L’apparecchio deve essere dotato di protezione extra in base alle norme relative alla potenza. Lo stesso è previsto anche qualora venga sostituito un apparecchio senza protezione extra.

Utilizzare sempre una spina a 3 poli. Il filo con isolamento verde/giallo deve essere messo a terra (marcatura).

In tutti gli altri casi un elettricista autorizzato sarà in grado di indicarvi come dare maggiore protezione all’apparecchio. Qualora l’edificio non disponga di protezione extra, l’ente Board of Electricity suggerisce l’installazione di un interruttore PFI o HPFI da parte di un elettricista (interruttore di contatto).

# PUESTA EN MARCHA DEL APARATO

Antes del uso, recomendamos limpiar el armario; remítase a la sección sobre mantenimiento y limpieza.

## Importante

Si el armario se ha colocado en posición vertical durante el transporte, espere 2 horas antes de ponerlo en marcha.

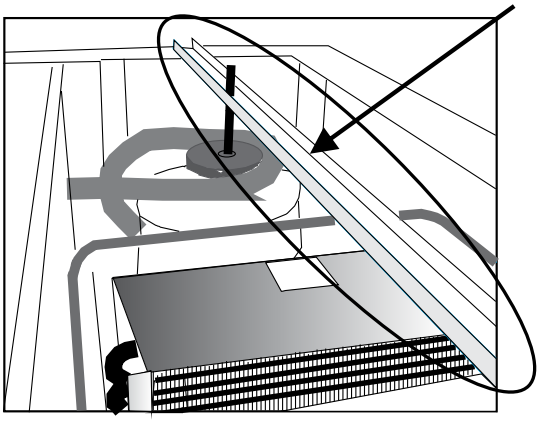

# CAPOVOLGIMENTO DELLE PORTE

NOTA BENE: il seguente procedimento deve essere fatto con le porte aperte!

Aprire il pannello frontale rimuovendo le viti come da figura 1.2.

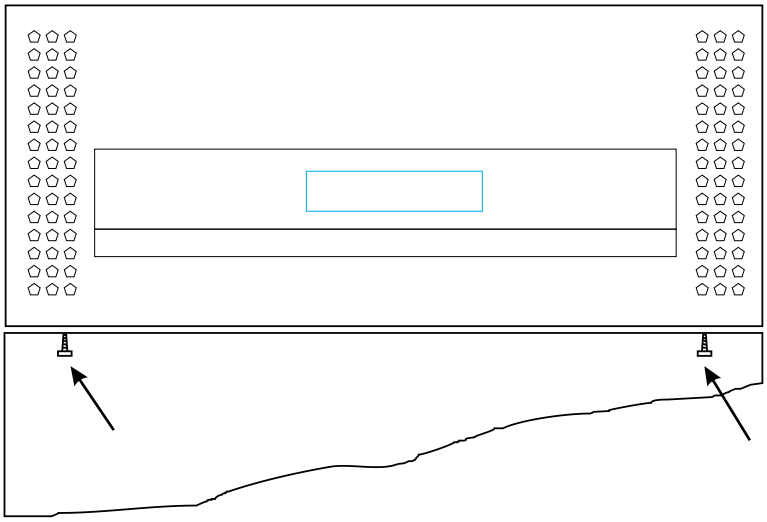

Rimuovere la vite di chiusura come mostrato in fig 1.3. Allentare la cerniera e estrarre la porta.

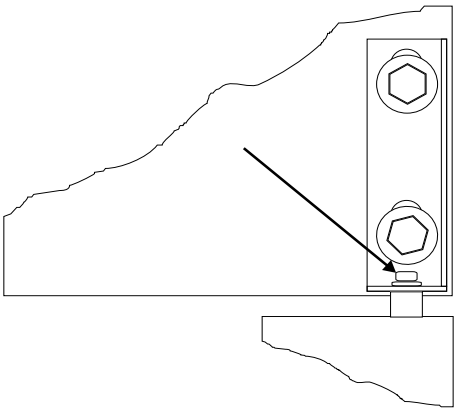

Invertire la posizione della cerniera a molla e del supporto in plastica, come da fig.1.4.

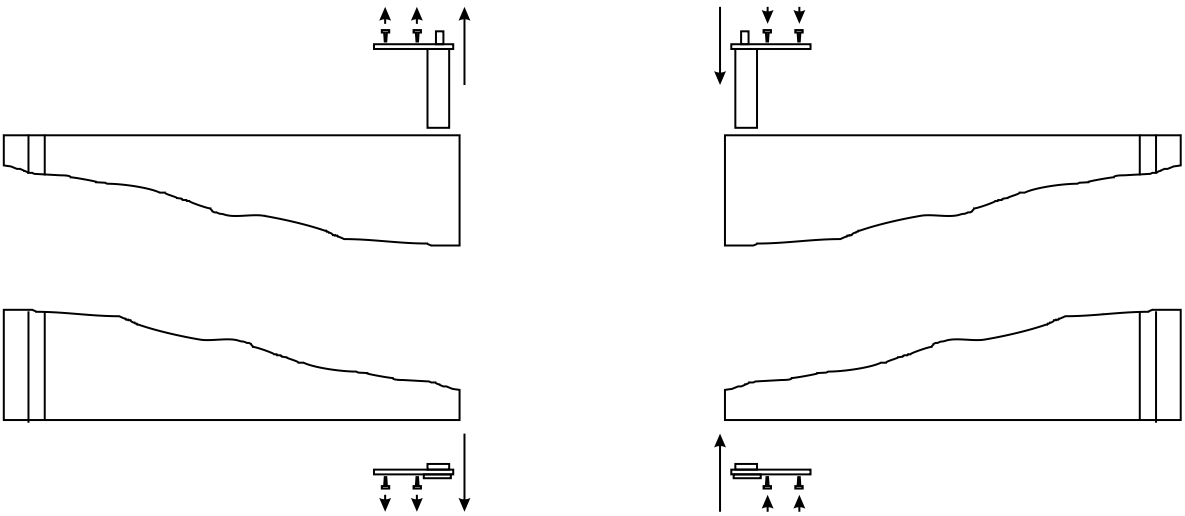

La cerniera in fondo può essere rimossa smontando i due piedini (o ruote) frontali e montandoli nel lato opposto dell'armadio; deve essere cambiata la posizione del perno da destra verso sinistra e successivamente rimontare i piedini. vedi fig. 1.5.

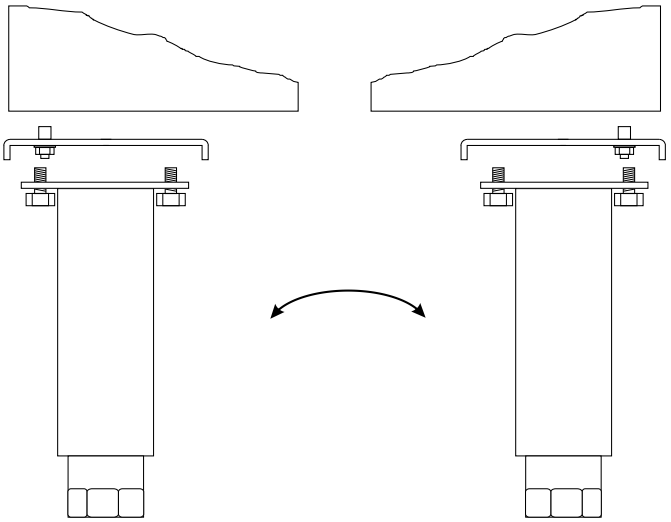

Fissati i piedini, vanno allentate le viti del supporto superiore ed inserita la porta. Controllare l'allineamento e il posizionamento della guarnizione magnetica.

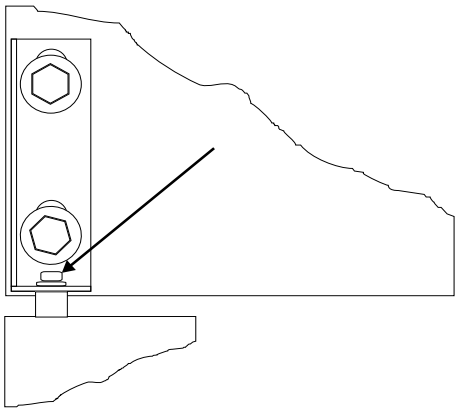

Successivamente, fissare definitamene le viti di fissaggio del supporto superiore.

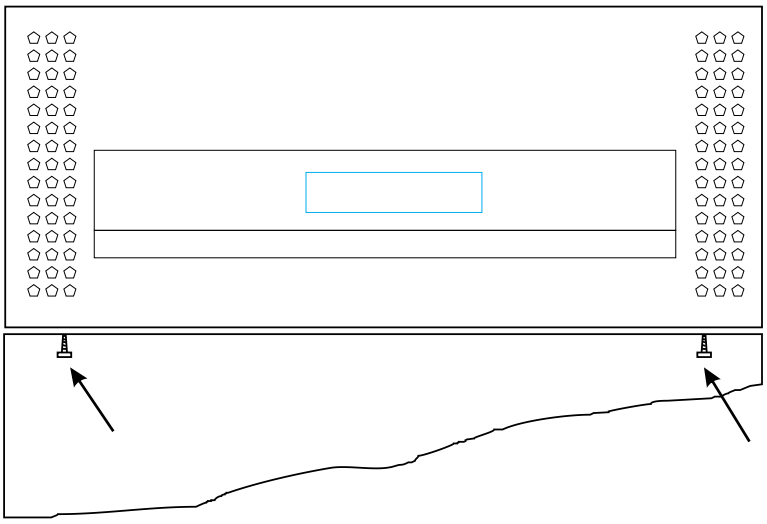

# TERMOSTATO

El termostato se coloca en el panel inferior

El termostato ya está programado para este aparato. En la mayoria de los casos, no es necesario ajustar las posiciones.
Al encender el aparato, el display/pantalla mostrará la temperatura actual en el aparato.

**Para indicar temperatura:**

SET Apriete esta tecla y la pantalla mostrará la temperatura fija. Apriete la tecla otra vez para normalizar la lectura.

**Cambio a nueva temperatura:**

SET Apriete esta tecla, más de 3 segundos, la pantalla mostrará la temperatura fija. (Il ‘°C’ LED lampeggia)

△ Apriete esta tecla para aumentar la temperatura fija.

▽ Apriete esta tecla para bajar la temperatura fija.

SET Apriete esta tecla para guardar la nueva posición. La pantalla destellará con el nuevo valor, y después volverá a la lectura normal.

**Serrure de clavier :**

△+▽ Presser ces boutons simultanément pendant 5 secondes pour bloquer, l’afficheur montre « Pof » ou pour débloquer, l’afficheur montre « Pon ».

**Codigos de alarma:**

‘P1’ Lampeggiante sul display: indica che la sonda nel frigorifero è difettosa.

‘P2’ Lampeggiante sul display: indica che la sonda dell’evaporatore è difettosa.

# CAMBIO DEI PARAMETRI

Vedi elenco dei parametri a pag. 92.

# DESCONGELACIÓN

El aparato descongela automáticamente con intervalos fijos programados. Si la puerta del aparato está abierta o el contenido del aparato se cambia con frecuencia, puede llegar a ser necesario descongelar el aparato manualmente.

Apriete esta tecla continuamente, más de 3 segundos, esto activará una escongelación manual, y después volverá a operar normalmente.

El agua de la descongelación circula para su evaporación a un contenedor, que está situado en el compartimento del compresor.

# MANTENIMIENTO Y LIMPIEZA

Desenchufe el refrigerador por la toma de corriente.

El armario se debe limpiar periódicamente. Limpie las superficies externas e internas del armario con una solución jabonosa ligera y séquelas después con un trapo.

NO use productos de limpieza que contengan cloro u otros productos abrasivos, puesto que pueden dañar las superficies y el sistema de refrigeración interno.

Limpie el compartimento del condensador y del compresor con un aspirador y un cepillo rígido.

# SERVICIO

El sistema de refrigeración es un sistema sellado herméticamente que no requiere supervisión, solo limpieza.

Si el armario no enfría, compruebe si el motivo es un corte de suministro eléctrico.

Si no puede encontrar el motivo de la avería del armario, póngase en contacto con su proveedor. Indique el modelo y el número de serie del armario. Puede encontrar dicha información en la etiqueta de características situada en el interior del armario, en el lado superior derecho.

# ELIMINACIÓN

El desechado del armario se debe realizar de forma respetuosa con el medio ambiente. Tenga en cuenta la normativa existente en cuanto a residuos. Es posible que haya requisitos y condiciones especiales que deban cumplirse.

rfj_200509

Specifications subject to changes without prior notification.
TEFCOLD A/S, Industrivej 25, DK-8800 Viborg

© TEFCOLD A/S 2020

TEFCOLD®
Cool Products Worldwide

# Gastro-Line Mesas frías

# Manual del usuario

## Modelos:

BF-P Series
BK-P Series
IF-P Series
RF-P Series
RK-I Series
RK-P Series


| | |
|---|---|
| ES | 61 |
| PT | 71 |
| RUS | 81 |

# SOMMARIO


1. Información general

Importantes instrucciones de seguridad ..... 64
Desembalaje e instalación ..... 64
Conexión eléctrica ..... 65
Puesta en marcha del aparato ..... 65
Cambio de la puerta ..... 66
Termostato ..... 68
Descongelación ..... 69
Mantenimiento y optimización de la eficiencia energética ..... 69
Servicio técnico ..... 69
Como deshacerse del aparato ..... 69
Diagrama de cableado ..... 91

2. Manual técnico para el termostato

Dixell XW20LRH ..... 92
Dixell XW60LRH ..... 97

# IMPORTANTES INSTRUCCIONES DE SEGURIDAD

1. Para obtener el uso completo y adecuado del aparato, recomendamos leer este manual de instrucciones.
2. Es responsabilidad del usuario el manejo adecuado del aparato, de acuerdo con las instrucciones dadas.
3. Contacte a su comerciante inmediatamente en caso de cualquier funcionamiento defectuoso.
4. Coloque el aparato en un lugar seco y ventilado.
5. Mantenga el aparato totalmente alejado de cualquier fuente de calor y no lo exponga a la luz directa del sol.
6. Tenga siempre presente que todo dispositivo eléctrico es una fuente potencial de peligro.
7. No almacene material inflammable tal como gas, gasolina, éter ó similares en el aparato.
8. No ha sido utilizado ningún asbesto ni CFC en la construcción.
9. El aceite en el compresor no contiene TCI.

¡SOLO PARA LOS MODELOS QUE INCORPOREN REFRIGERANTE R290/R600a!

Este electrodoméstico contiene un refrigerante inflamable. Por lo tanto, asegúrese de disponer de una buena ventilación a su alrededor. No utilice dispositivos mecánicos para descongelar el electrodoméstico, ya que podría causar fugas en el sistema de refrigeración.No utilice aparatos eléctricos en el interior del compartimento de almacenamiento refrigerado.

Deje cualquier reparación del electrodoméstico en manos de un técnico cualificado (EN 60335-2-89: 2010).

## Importante !

La base de este refrigerador está diseñada para recipientes herméticamente sellados que contienen alimentos procesados (EN 16825).

# DESEMBALAJE E INSTALACIÓN

El aparato se entrega embalado y en un palet, desembálelo. Las superficies exteriores están forradas con un plástico protector, quítelo antes de hacer la instalación.

# CONEXIÓN ELÉCTRICA

Este electrodoméstico está diseñado para su uso a 230 V/50 Hz. Debe enchufarse a una toma de corriente accesible.

Este electrodoméstico debe disponer de una protección adicional de acuerdo con las normativas sobre electricidad. Esto es aplicable también en el caso de que reemplace una unidad existente que no disponga de protección adicional.

Use siempre un enchufe de tres clavijas. El hilo con aislante verde/amarillo debe conectarse a tierra (con marca ).

En todos los demás casos, un electricista autorizado le informará sobre cómo obtener la protección adicional para el electrodoméstico. En caso de el edificio no disponga de protección adicional, las autoridades recomiendan que un electricista instale un interruptor PFI o HPFI (disyuntor).

# PUESTA EN MARCHA DEL APARATO

Antes de su uso, recomendamos que el aparato se limpie, vea la sección de mantenimiento y limpieza

## Importante !

Si el aparato ha sido colocado horizontalmente durante su transporte, espere, por favor, 2 horas antes de la puesta en marcha del aparato.
Recuerde quitar el dispositivo de seguridad de transporte en el compresor. Quite la barra entera, como se muestra en fig. 1.8.

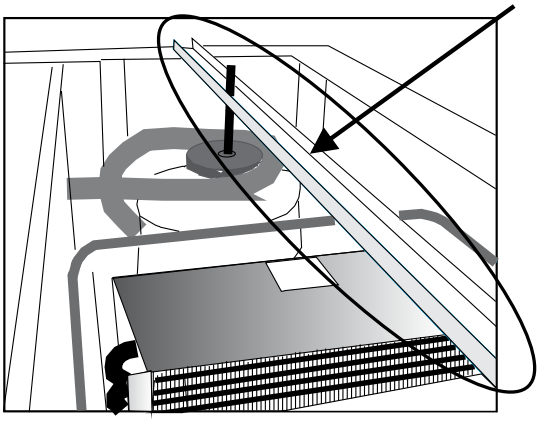

# CAMBIO DE LA PUERTA

Recuerde, que se debe hacer con la puerta abierta.

Abra la parte alta quitando los tornillos mostrados en Fig. 1,2.

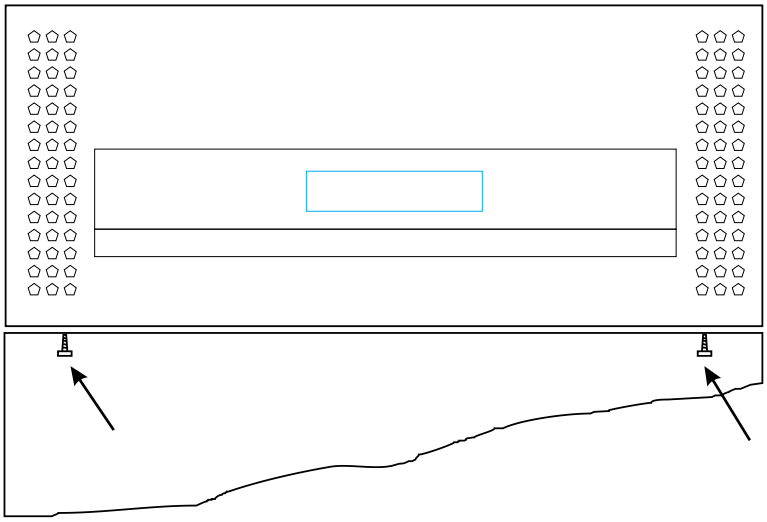

Quite la contratuerca del resorte de la puerta, como se muestra en Fig. 1,3. Afloje la bisagra y quite la puerta.

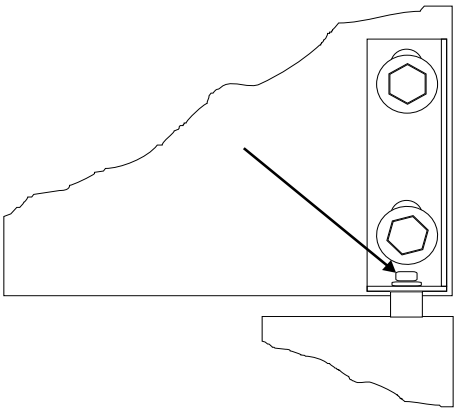

La puerta se coloca horizontalmente abajo, y después se pasa a invertir el resorte de la puerta y el casquillo/manguito del fondo, ver Fig. 1.4.

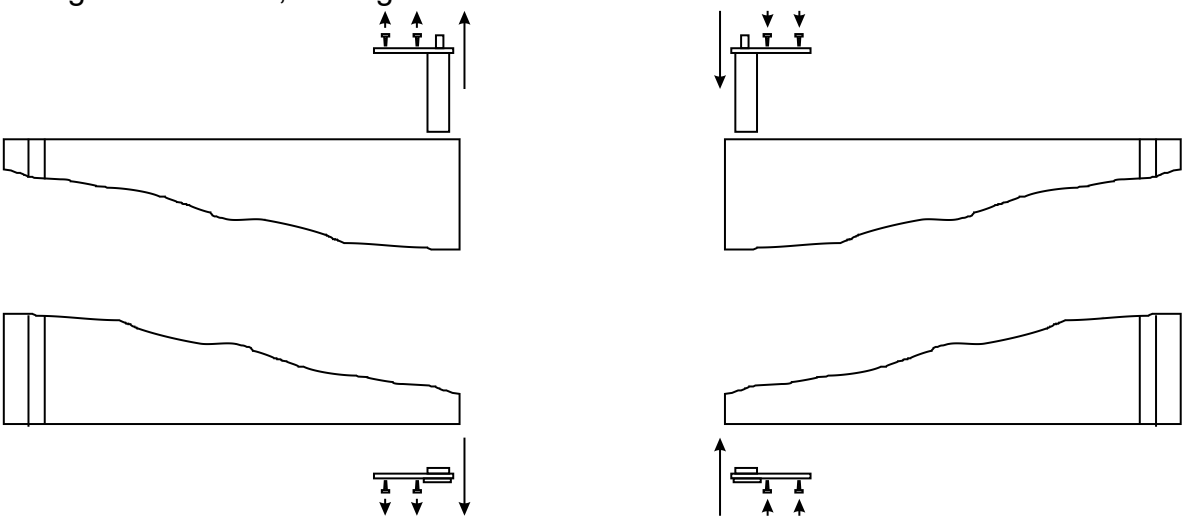

La bisagra inferior es invertida desmontando las patas/las ruedas delanteras, y después las monta en el otro lado del aparato, ver Fig. 1.5.

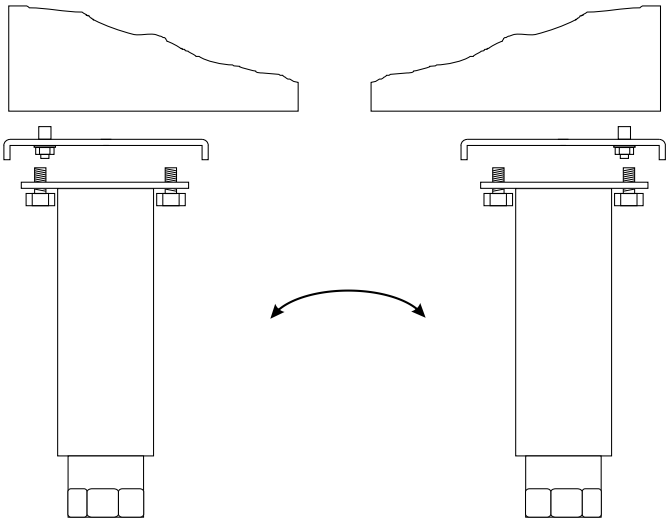

En el lado de la nueva visagra, afloje la visagra de arriba, y coloque la puerta en la visagra de abajo. La visagra se ajusta/aprieta en el resorte de la puerta para que se quede fija. Coloque la contrapuerca, como en Fig. 1.6

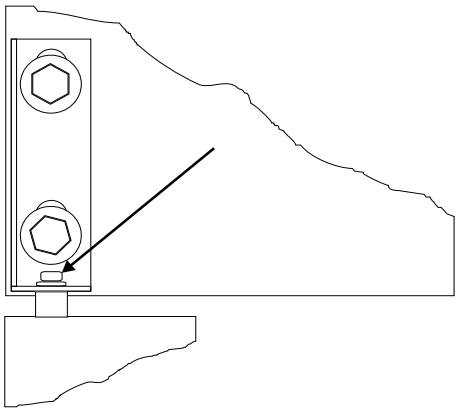

Cierre y fije la parte superior con los tornillos ver Fig. 1.7.

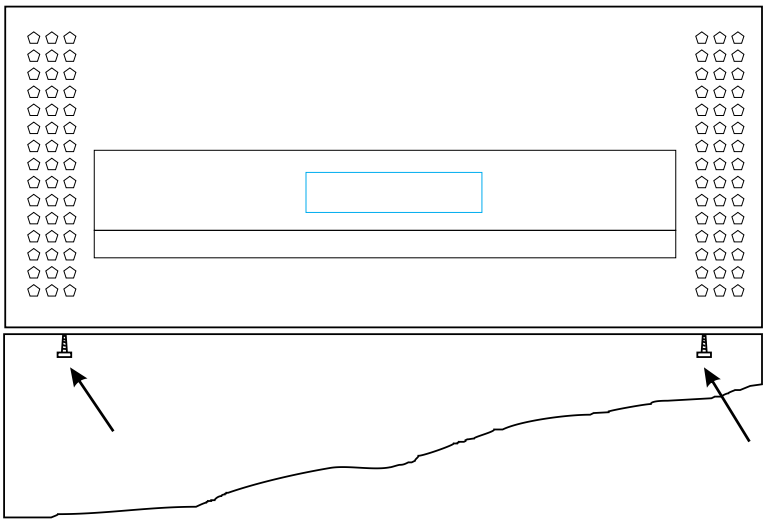

# TERMOSTATO

El termostato está colocado en el tablero de control.

El termostato ya está programado para este aparato. En la mayoria de los casos, no es necesario ajustar las posiciones.

Al encender el aparato, el display/pantalla mostrará la temperatura actual en el aparato.

**Para indicar temperatura:**

SET Apriete esta tecla y la pantalla mostrará la temperatura fija. Apriete la tecla otra vez para normalizar la lectura.

**Cambio a nueva temperatura:**

SET Apriete esta tecla, más de 3 segundos, la pantalla mostrará la temperatura fija.

Apriete esta tecla para aumentar la temperatura fija.

Apriete esta tecla para bajar la temperatura fija.

SET Apriete esta tecla para guardar la nueva posición. La pantalla destellará con el nuevo valor, y después volverá a la lectura normal.

**Cierre del teclado:**

Para cerrar o activar el teclado, apriete estas teclas simultáneamente durante 5 segundos. (Para cerrar, la pantalla muestra ‘POF’, para activar, la pantalla muestra ‘PON’)

**Codigos de alarma:**

‘P1’ Destellando en la pantalla, indica que el sensor del aparato está defectuoso.

‘P2’ Destellando en la pantalla, indica que el sensor de evaporación está defectuoso.

# CAMBIO DE PARÁMETROS

Vea lista de parámetros en la página 92.

# DESCONGELACIÓN

El aparato descongela automáticamente con intervalos fijos programados. Si la puerta del aparato está abierta o el contenido del aparato se cambia con frecuencia, puede llegar a ser necesario descongelar el aparato manualmente.

Apriete esta tecla continuamente, más de 3 segundos, esto activará una descongelación manual, y después volverá a operar normalmente.

El agua de la descongelación circula para su evaporación a un contenedor, que está situado en el compartimento del compresor.

# MANTENIMIENTO Y OPTIMIZACIÓN DE LA EFICIENCIA ENERGÉTICA

Apague el aparato desde el enchufe.

El aparato debe ser limpiado periódicamente. Limpie las superficies externas e internas del aparato con una solución ligera de jabón, y seque bien. Las superficies externas pueden mantenerse limpias con un aceite especial para acero.
No utilice limpiadores que contienen cloro u otros productos agresivos, pues pueden dañar las superficies inoxidables del acero y el sistema interior de refrigeración.
Limpie el condensador y el compartimento del compresor con la ayuda de un aspirador y un cepillo duro.
No riegue con una manguera el compartimento del compresor, ya que el agua puede causar cortocircuitos y daño en las partes eléctricas.

# SERVICIO TÉCNICO

El sistema de refrigeración es un sistema herméticamente sellado, y no requiere supervisión, sólo limpieza.
Si el aparato falla en la refrigeración, verifique que la razón no sea un apagón, bien desde el enchufe o de los plomos.
Si no puede localizar la razón del fallo del aparato, contacte, por favor, a su suministrador.
Informe, por favor, del modelo y el número de serie del aparato.Usted puede encontrar esta información en la etiqueta que está colocada dentro del aparato arriba, a mano derecha.

# COMO DESHACERSE DEL APARATO

Cuando se tenga que deshacer del aparato, deberá hacerlo teniendo en cuenta las normas al respecto. Puede que haya unas exigencias y condiciones que se deban cumplir.

rfj_200509

Specifications subject to changes without prior notification.
TEFCOLD A/S, Industrivej 25, DK-8800 Viborg

© TEFCOLD A/S 2020

TEFCOLD®
Cool Products Worldwide

# Gastro-Line Mesas de refrigeração

# Manual do usuário

## Modelos:

BF-P Series
BK-P Series
IF-P Series
RF-P Series
RK-I Series
RK-P Series


PT 71

RUS 81

# ÍNDICE


1. Información general

Instruções importantes de segurança ..... 74
Desembalagem e instalação ..... 74
Ligações Eléctricas ..... 75
Arranque da arca ..... 75
Inversão da porta ..... 76
Termostato ..... 78
Descongelamento ..... 79
Manutenção e otimização de eficiência energética ..... 79
Assistência Técnica ..... 79
Eliminação ..... 79
Diagrama de fiação ..... 91

2. Manual técnico para termostato

Dixell XW20LRH ..... 92
Dixell XW60LRH ..... 97

# INSTRUÇÕES IMPORTANTES DE SEGURANÇA

1. Para se obter uma utilização plena desta arca vertical, recomendamos-lhe que leia este manual de instruções.
2. A utilização do aparelho de acordo com as instruções fornecidas é da inteira responsabilidade do utilizador.
3. Contacte imediatamente o distribuidor em caso de avarias.
4. Coloque a máquina num local seco e ventilado.
5. Mantenha o aparelho afastado de fontes de calor intenso e não o exponha a luz solar directa.
6. Tenha sempre presente que qualquer dispositivo eléctrico é uma fonte de perigo potencial.
7. Não armazene na arca quaisquer materiais inflamáveis, como diluente, gasolina, etc.
8. Declara-se que não foi usado amianto ou CFC na construção deste aparelho.
9. O óleo no compressor não contém PCB.

APENAS PARA EQUIPAMENTOS COM REFRIGERANTE R290/R600a!

Este equipamento contém um agente refrigerante inflamável. Por isso, certifique-se de que existe boa ventilação em torno do mesmo. Não utilize dispositivos mecânicos quando descongelar, pois pode provocar fugas no sistema de refrigeração. Não utilize equipamentos eléctricos no interior do compartimento de arrumação refrigerado.

Todos trabalhos de reparação no aparelho devem ser realizados por um técnico qualificado (EN 60335-2-89: 2010).

## Importante

A base deste frigorífico foi concebida para recipientes hermeticamente fechados contendo alimentos processados (EN 16825).

# DESEMBALAGEM E INSTALAÇÃO

Retire el palet de madera y el embalaje. Las superficies exteriores llevan una lámina de protección que se debe retirar antes de la instalación.

Para garantir o correcto funcionamento da arca, é importante que esta esteja nivelada. Se a arca tiver pés, estes podem ser ajustados.

# LIGAÇÕES ELÉCTRICAS

A arca funciona a 230 V/50 Hz.

A tomada de parede deverá estar facilmente acessível.

Todas as ligações à  terra estipuladas pelas autoridades eléctricas locais deverão ser observadas. A ficha da arca e a tomada de parede deverão fornecer a ligação à terra adequada. Se houver qualquer dúvida, contacte o distribuidor local ou um electricista qualificado.

As principais ligações eléctricas deverão ser executadas por electricistas credenciados.

# ARRANQUE DA ARCA

Antes de utilizá-la, recomendamos que a arca seja limpa; consulte a secção sobre manutenção e limpeza.

## Importante

Se a arca tiver sido colocada na vertical durante o transporte, aguarde duas horas até ligá-la. Lembre-se de retirar o dispositivo de segurança do compressor. Retire a barra completa, conforme mostrado na fig. 1.8.

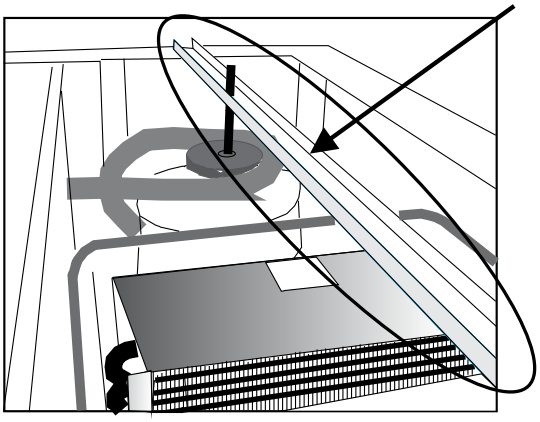

# INVERSÃO DA PORTA

NOTE que o procedimento seguinte deverá ser levado a cabo com a porta aberta!

Abra a parte superior retirando o parafuso mostrado na fig. 1.2.

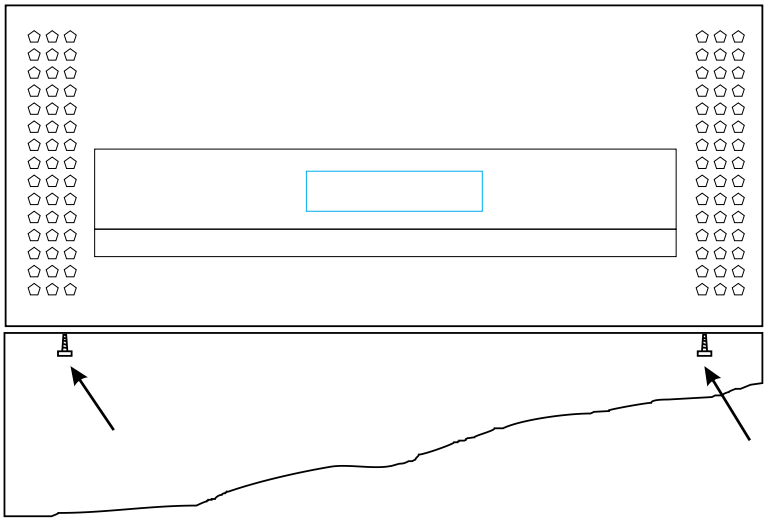

Retire o parafuso de fixação na mola da porta como mostrado na fig. 1.3. Desaperte o a dobradiça e retire a porta.

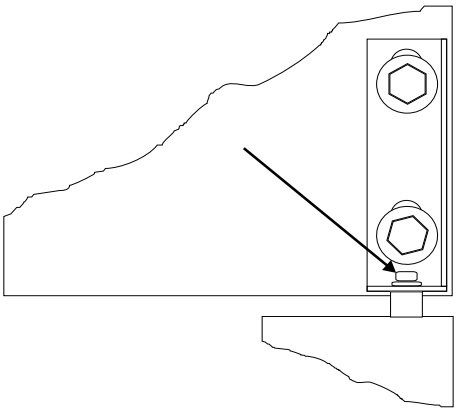

A porta é colocada na horizontal e a mola da porta e o apoio inferior são invertidos, como mostrado na fig. 1.4.

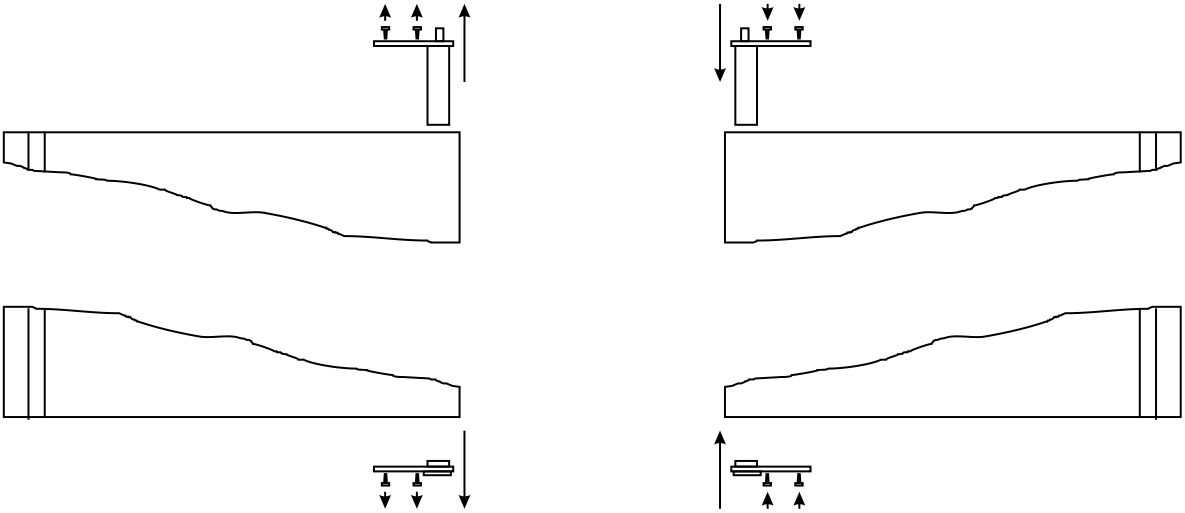

A dobradiça inferior é invertida desmontando-se o pé/roda dianteira e tornando a montar-se no outro lado da arca, conforme mostrado na fig. 1.5.

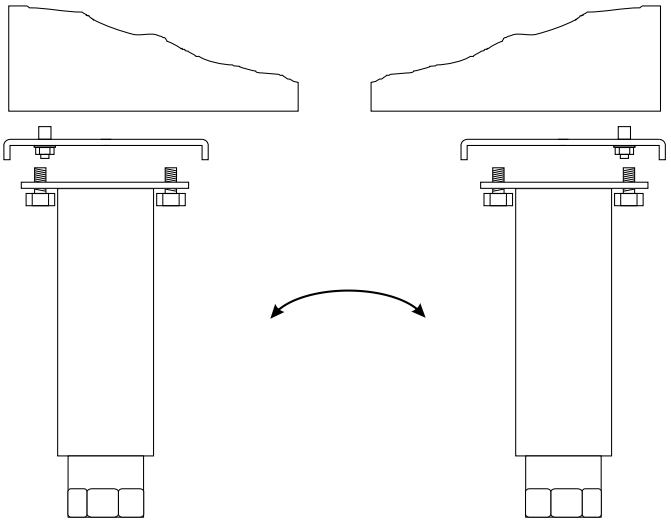

Desaperte a dobradiça superior na sua nova posição e substitua a porta na dobradiça inferior. A dobradiça é pressionada para baixo na mola da porta e é apertada. Coloque o parafuso de fixação, como mostrado na fig. 1.6

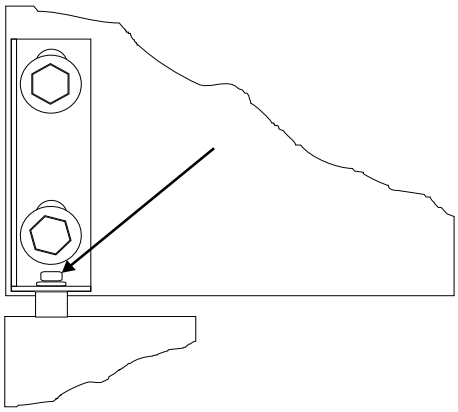

Feche e aperte a parte de cima com o parafuso, como se vê na fig. 1.7.

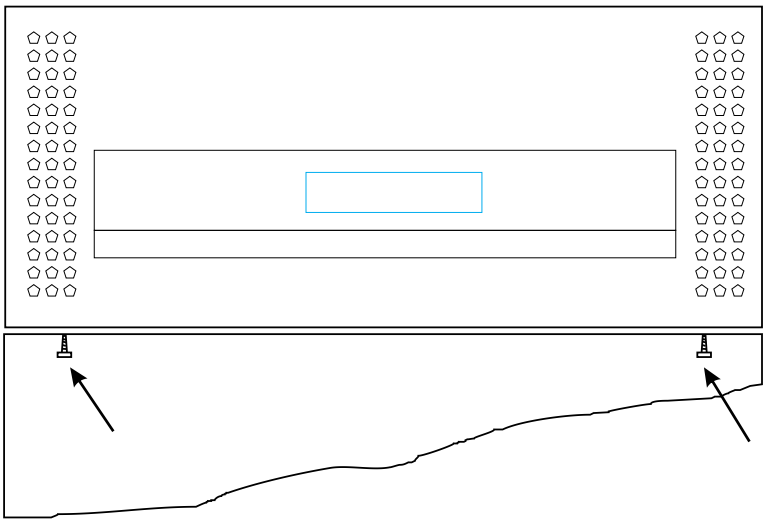

# TERMÓSTATO

O termóstato encontra-se no painel de controlo.

O termóstato foi pré-regulado e, na maioria dos casos, não é necessário qualquer ajuste.

Quando a arca é ligada, o visor irá exibir a temperatura actual na câmara.

**Exibir a temperatura definida:**

SET Pressione este botão e o visor vermelho irá exibir, piscando, a temperatura definida. Prima a tecla novamente para regressar à leitura normal.

**Definir uma nova temperatura:**

SET Pressione este botão for premido continuamente durante mais de 3 segundos, e o visor vermelho irá exibir a temperatura definida.

△ Pressione este botão para aumentar a temperatura definida.

▽ Pressione este botão para diminuir a temperatura definida.

SET Pressione este botão para guardar o novo parâmetro. O visor irá exibir o novo valor a piscar e gressará à leitura normal.

**Bloqueio do teclado :**

△+▽ Para bloquear ou desbloquear o teclado, prima estas teclas simultaneamente durante cerca de 5 segundos (para bloquear, o visor exibe “Pof”, para desbloquear, o visor exibe “Pon”).

**Códigos de Alarme:**

‘P1’ A piscar no visor: indica que o sensor da arca tem uma anomalia.

‘P2’ A piscar no visor: indica que o evaporador da arca tem uma anomalia.

# ALTERAÇÃO DE PARÂMETROS

Consulte a tabela de parâmetros na página 92.

# DESCONGELAMENTO

A arca descongela automaticamente em intervalos pré-definidos. Se houver frequentes aberturas da porta da arca ou mudanças do conteúdo, poderá ser necessário descongelar a arca manualmente.

Se este botão for premido continuamente durante mais de 3 segundos, dá-se início à descongelação manual e depois regressará ao funcionamento normal.

A água daí resultante é recolhida num receptáculo colocado no compartimento do compressor e depois evapora.

# MANUTENÇÃO E OTIMIZAÇÃO DE EFICIÊNCIA ENERGÉTICA

Desligue a arca da tomada de parede.

A arca deve ser limpa periodicamente. Limpe as superfícies interna e externa da arca com uma solução ligeiramente ensaboada e seque de seguida. As superfícies externas poderão ser conservadas com um óleo de máquina.
NÃO utilize produtos de limpeza que contenham cloro ou produtos abrasivos pois poderão danificar as superfícies de aço inoxidável e o sistema de arrefecimento interno.
Limpe o condensador e o compartimento do compressor utilizando um aspirador e uma escova de cerdas duras.
NÃO lave à mangueira o compartimento do compressor pois poderá provocar curto-circuitos e danos às partes eléctricas.

# ASSISTÊNCIA TÉCNICA

O sistema de arrefecimento é hermeticamente selado e não requer supervisão; apenas limpeza.

Se a arca não arrefecer, verifique se isso se deve a uma falta de electricidade.

Se não conseguir diagnosticar a causa da falha da arca, contacte o distribuidor. Informe o modelo e o número de série da arca. Poderá encontrar esta informação na etiqueta de características localizada na parte de dentro da  arca, do lado superior direito.

# ELIMINAÇÃO

A eliminação da arca deverá efectuar-se de modo ambientalmente correcto. Aquando da eliminação, tenha em consideração a legislação existente. Poderá haver requisitos e condições especiais a serem observados.

rfj_200509

Specifications subject to changes without prior notification.
TEFCOLD A/S, Industrivej 25, DK-8800 Viborg

© TEFCOLD A/S 2020

TEFCOLD®
Cool Products Worldwide

# Шкафы Gastro-Line

# Руководство пользователя

## модели:

BF-P
BK-P
IF-P
RF-P
RK-I
RK-P

RUS 81

# СОДЕРЖАНИЕ

1. содержание

Внимание ..... 84
Распаковка и установка ..... 84
Подключение к электросети ..... 85
Запуск ..... 85
Установка двери в противоположную сторону ..... 86
Термостат ..... 88
Размораживание ..... 89
Техобслуживание ..... 89
Устранение неполадок ..... 89
Утилизация ..... 89
Электрическая схема ..... 91

2. Техническое руководство по термостату

Dixell XW20LRH ..... 92
Dixell XW60LRH ..... 97

# ВНИМАНИЕ

1. Перед использованием Бэк-бара необходимо прочитать инструкцию.
2. Пользователь несёт ответственность за использование Бэк-бара в соотвествии с инструкциями.
3. В случае неполадков свяжитесь с дистрибьютором.
4. Бэк-бар должен быть расположен в сухом и хорошо проветриваемом помещении.
5. Не допускается установка изделия вблизи источников теплового излучения, т.е.плит, батарей отопления и т.п., а также в местах действия прямых солнечных лучей.
6. Обратите внимание на то, что любой електрический аппарат может быть опасным.
7. Нельзя использовать для хранения взрывоопасных веществ, таких как например газ. бензин и т.п.
8. В конструкции изделия не использованы асбест или CFC.
9. Компрессорное масло не содержит PCB

Этот шкаф содержит горючий хладагент.

## Внимание!

Основа этого холодильника предназначена для герметично запечатанных контейнеров с обработанными пищевыми продуктами (EN 16825).

# РАСПАКОВКА И УСТАНОВКА

Бэк-бар поставляется в упакованном виде. Перед тем как распаковать, проверьте если нет повреждений на упаковке.

# ПОДКЛЮЧЕНИЕ К ЭЛЕКТРОСЕТИ

Бэк-бар должен быть подключён к питающей электрической сети 230 V/50 Hz.

Розетка должна находится в легко доступном месте. Подключение к электросети допускается только через стационарную розетку или удлинитель с заземляющим проводом.

# ЗАПУСК

Перед использованием Бэк-бар необходимо почистить, см. раздел «Обслуживание».

## Внимание!

Если Бэк-бар при перевозке находился в лежачем состоянии, подождите 2 часа до того как влючать его в электросеть.
Не забудьте снять с компрессора защитное устройства защищающее от повреждений при перевозке, рис.1.8.

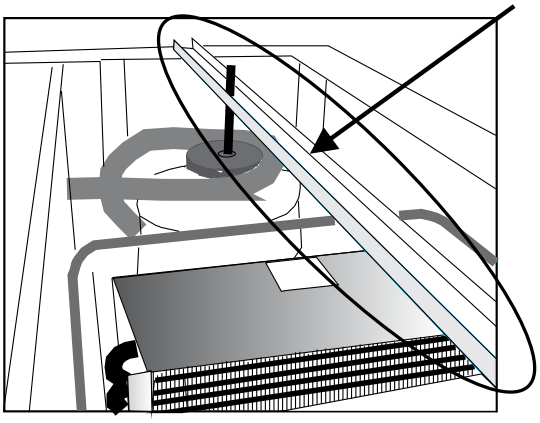

# УСТАНОВКА ДВЕРИ В ПРОТИВОПОЛОЖНУЮ СТОРОНУ

ВНИМАНИЕ! Устанавливать только при открытых дверях.

Открутите винты и откройте верхнюю часть шкафа, как показано на рисунке 1.2.

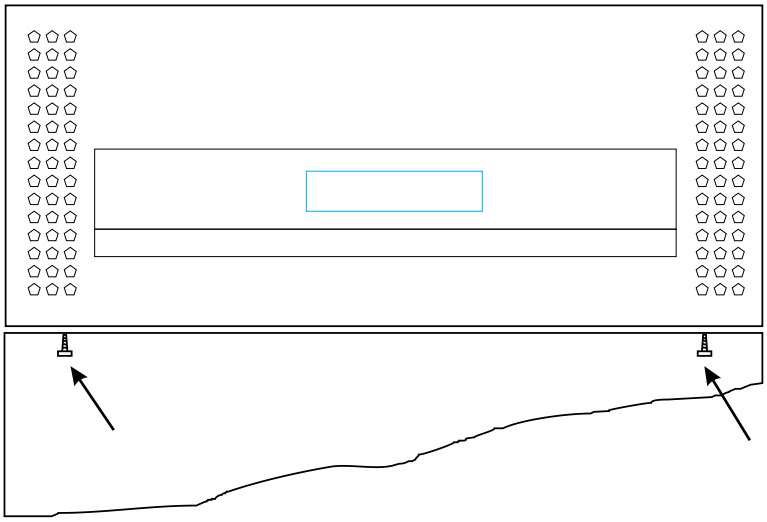

Снимите болты, дверь освободится и легко отойдёт, рис.1.3.

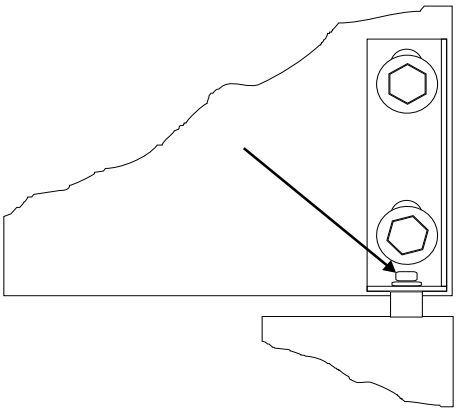

Положите дверь на пол и поменяйте держатель и пружину на другую сторону, рис.1.4.

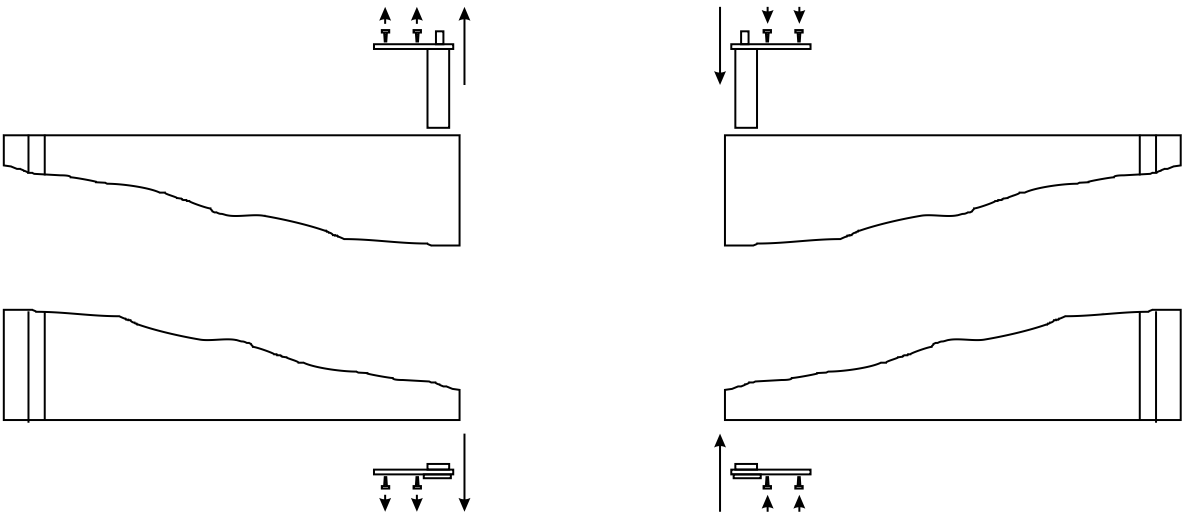

Нижняя дверная петля откручивается после снятия передних ножек, после чего ножки встраиваются на противоположную сторону, рис.1.5.

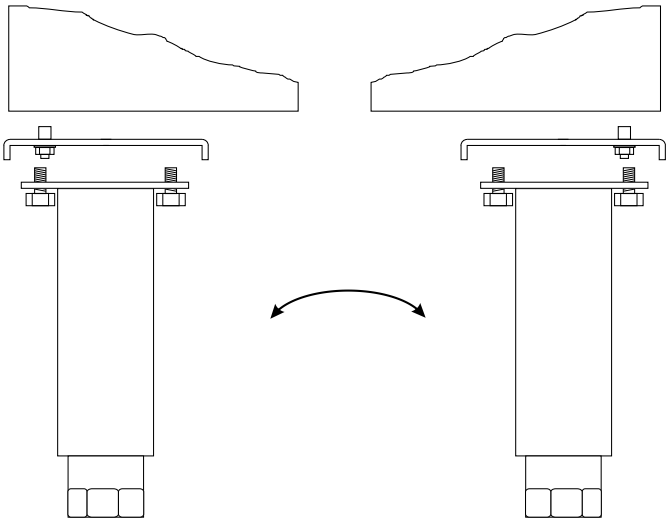

После того как все детали вмонтированы на противоположной стороне, расслабьте верхние петли , поставьте дверь на место, надстроив на нижние петли. Вставьте винт, как показано на рис.1.6.

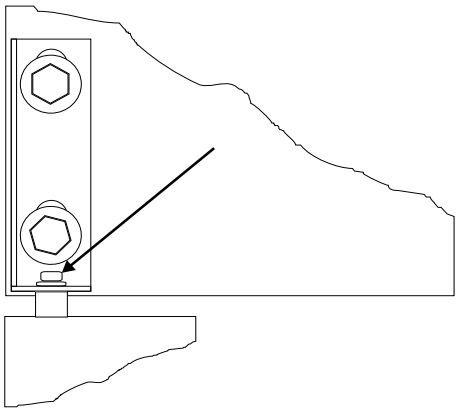

И закрепите верхнюю часть, рис.1.7.

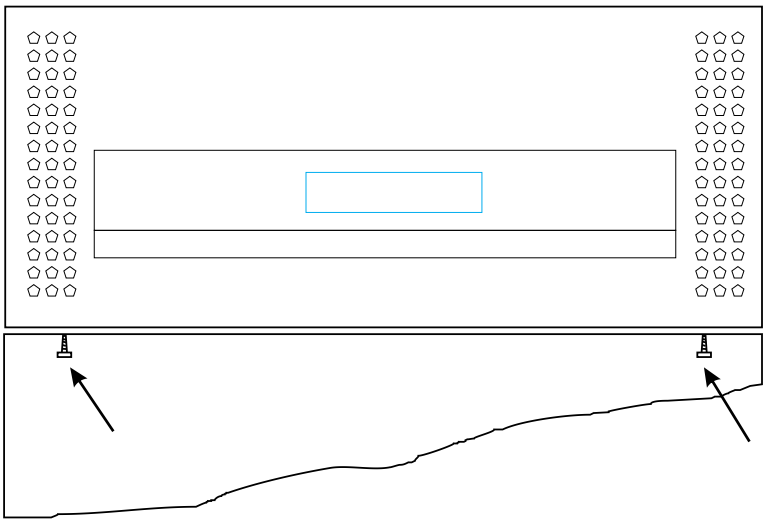

# ТЕРМОСТАТ

Термостат находится на контрольной панели

Термостат запрограммирован, поэтому нет необходимости в его настройке.
При включении стола, на экране дисплея появится актуальная внутренняя температура стола.

**Показ внутренней температуры:**

SET — Нажмите на данную кнопку и на экране дисплея покажется настроенная температура. Чтобы вернуться в исходное положение надо ещё раз нажать на кнопку.

**Настройка температуры:**

SET — Нажмите на кнопку более 3 секунд пока на дисплее не появится настроенная температура.

△ — При нажатии на данную кнопку, температура возрастает.

▽ — При нажатии на данную кнопку, температура снижается.

SET — Нажмите на эту кнопку, чтобы запомнить/зарегистрировать новые данные.

**Блокирование кнопок :**

△+▽ — Для избежания случайных нажиманий на кнопки, их блокируют. Для этого нажмите одновременно на обе кнопки в течение 5 секунд пока на экране не появится «Pof». Для разблокирования повторите тоже самое, пока на экране не появится «Pon»

**Аварийная сигнализация:**

'P1' — Мигающая лампа указывает на повреждение датчика.

'P2' — Мигающая лампа указывает что повреждён датчик испарителя.

# РЕГУЛИРОВАНИЕ ТЕМПЕРАТУРЫ

См.таблицу параметров на стр. 92.

# РАЗМОРАЖИВАНИЕ СТОЛА

Стол размораживается автоматически с запрограммированными интервалами.
В случае частого открывания дверцы стола может возникнуть необходимость ручного размораживания

Механическое размораживание запускается при помощи нажатия на данную кнопку более 3 секунд, после чего изделие запускается как обычно.

Оттаявщая вода стекается в ванночку расположенную в компрессорном отделе.

# ТЕХОБСЛУЖИВАНИЕ

Отключите Бэк-бар от сети.

Бэк-бар необходимо регулярно чистить. Мойка изделия производится теплой водой с небольшим количеством мыльного средства. После чего Бэк-бар промыть чистой водой и просушить.

ЗАПРЕЩАЕТСЯ использовать хлоросодержащие моющие средства или другие едкие средства, которые могут повредить работе Бэк-бара.

# УСТРАНЕНИЕ НЕПОЛАДОК

При неполадках в холодильной системе проверьте вставлена ли вилка в розетку и подключена ли розетка,  а также если нет неполадков в сети.
Если причину неисправности не возможно выяснить, обратитесь к дилеру. Обращаясь к дилеру, назовите модель холодильника, серийный номер и номер изделия. Эти данные указаны на заводской табличке с правой стороны на внутренней панеле шкафа.

# УТИЛИЗАЦИЯ

Если срок эксплуатации изделия подошёл к концу, его следует утилизировать без нанесения вреда окружающей среде. Следует принимать во внимание существующие правила утилизации. Помимо этого могут существовать определённые законодательные требования по утилизации, которым тоже необходимо следовать.

rfj_200509

Specifications subject to changes without prior notification.
TEFCOLD A/S, Industrivej 25, DK-8800 Viborg

© TEFCOLD A/S 2020

# COOLERS

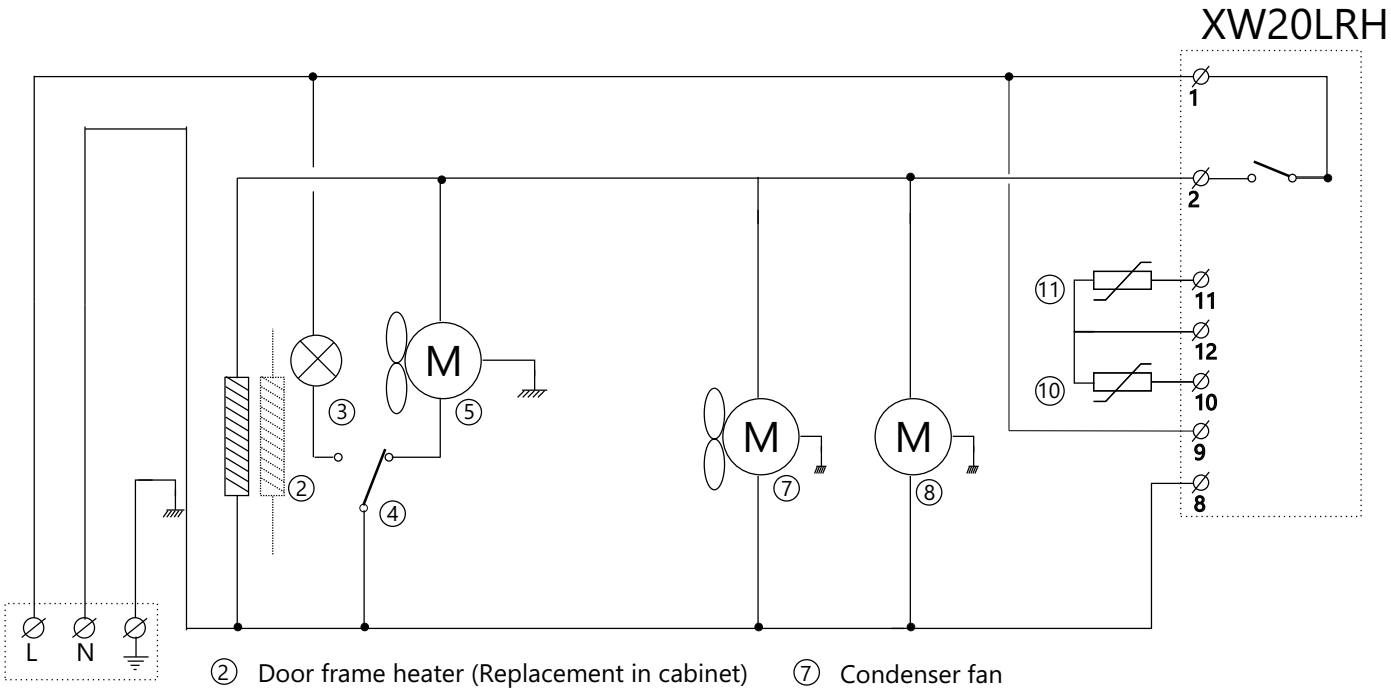


② Door frame heater (Replacement in cabinet)
③ Internal LED light
④ Door switch
⑤ Evaporator fan
⑦ Condenser fan
⑧ Compressor
⑩ Evaporator probe
⑪ Cabinet probe

# FREEZERS

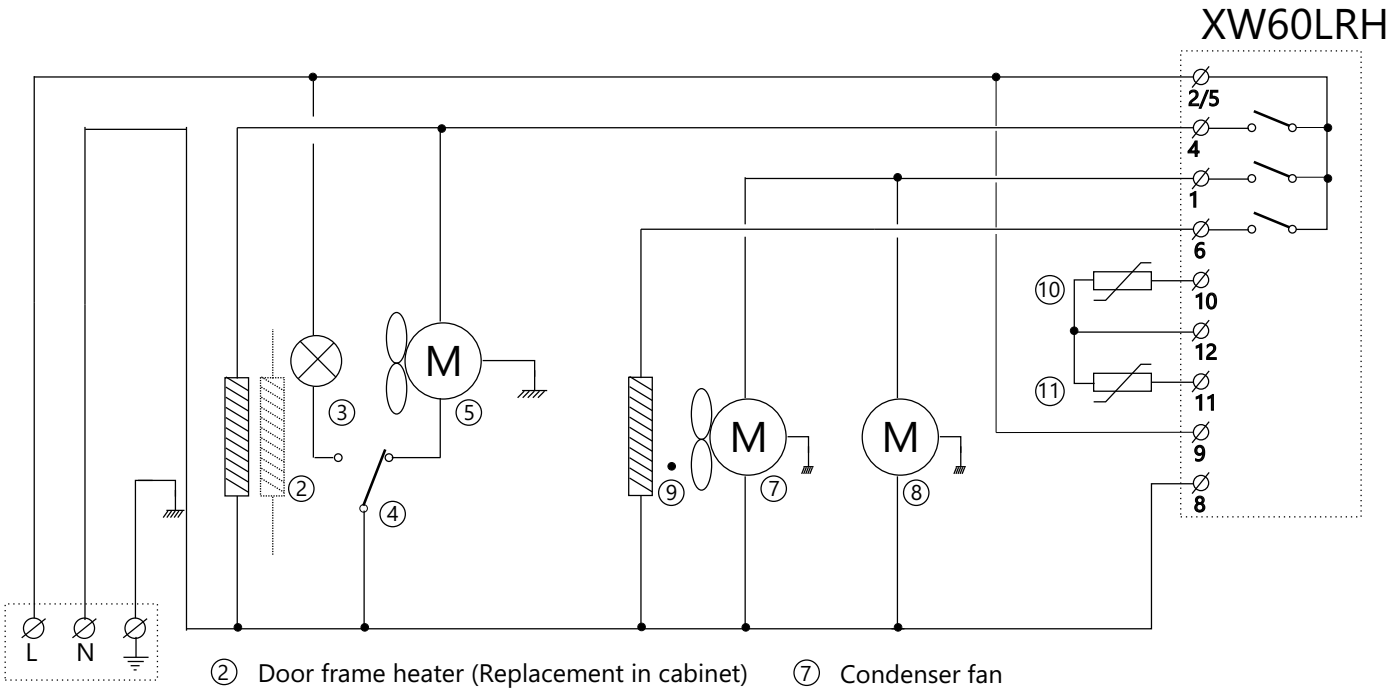


② Door frame heater (Replacement in cabinet)
③ Internal LED light
④ Door switch
⑤ Evaporator fan
⑦ Condenser fan
⑧ Compressor
⑨ Defrost heater
⑩ Evaporator probe
⑪ Cabinet probe

# Digital controller with off cycle defrost and auxiliary relay

# XW20LR –XW20LRH

## 1. GENERAL WARNING

### 1.1 PLEASE READ BEFORE USING THIS MANUAL

- This manual is part of the product and should be kept near the instrument for easy and quick reference.
- The instrument shall not be used for purposes different from those described hereunder. It cannot be used as a safety device.
- Check the application limits before proceeding.
- Dixell Srl reserves the right to change the composition of its products, even without notice, ensuring the same and unchanged functionality.

### 1.2 ⚠ SAFETY PRECAUTIONS

- Check the supply voltage is correct before connecting the instrument.
- Do not expose to water or moisture: use the controller only within the operating limits avoiding sudden temperature changes with high atmospheric humidity to prevent formation of condensation
- Warning: disconnect all electrical connections before any kind of maintenance.
- Fit the probe where it is not accessible by the End User. The instrument must not be opened.
- In case of failure or faulty operation send the instrument back to the distributor or to "Dixell S.r.l." (see address) with a detailed description of the fault.
- Consider the maximum current which can be applied to each relay (see Technical Data).
- Ensure that the wires for probes, loads and the power supply are separated and far enough from each other, without crossing or intertwining.
- In case of applications in industrial environments, the use of mains filters (our mod. FT1) in parallel with inductive loads could be useful.
- Dixell Srl reserves the right to change the composition of its products, even without notice, ensuring the same and unchanged functionality.

## 2. GENERAL DESCRIPTION

Model **XW20LR, XW20LRH**, format 38x185mm, is a digital thermostat with off cycle defrost designed for refrigeration applications at medium and low temperature. It has 2 relay outputs, one to control compressor and the other (configurable) to control light, auxiliary or alarm. It could be provided with a Real Time Clock which allows programming of up to 6 daily defrost cycles, divided into holidays and workdays. A "Day and Night" function with two different set points is fitted for energy saving. It is also provided with up to three NTC or PTC probe inputs, the first one for temperature control, the second one, to be located onto the evaporator and to control the defrost termination temperature. The third probe is used to signal the condenser temperature alarm or to display a temperature. One of the 2 digital inputs can operate as fourth probe input.
The HOT KEY output allows to connect the unit, by means of the external module XJ485-CX, to a network line **ModBUS-RTU** compatible such as the dixell monitoring units of X-WEB family. It allows to program the controller by means the HOT KEY programming keyboard.
The instrument is fully configurable through special parameters that can be easily programmed through the keyboard.

## 3. CONTROLLING LOADS

### 3.1 COMPRESSOR

The regulation is performed according to the temperature measured by the thermostat probe with a positive differential from the set point: if the temperature increases and reaches set point plus differential the compressor is started and then turned off when the temperature reaches the set point value again.

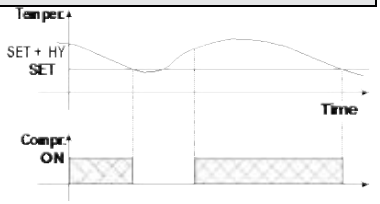


In case of fault in the thermostat probe the start and stop of the compressor are timed through parameters "**COn**" and "**COF**".

### 3.2 DEFROST

Defrost is performed through a simple stop of the compressor. The defrost interval depends on the presence of the RTC (optional). If the RTC is present is controlled by means of parameter "**EdF**":
- with EdF=in the defrost is made every "**IdF**" time – standard way for controller without RTC.
- with EdF = "rtc", the defrost is made in real time depending on the hours set in the parameters **Ld1..Ld6** on workdays and in **Sd1…Sd6** in holidays;

Other parameters are used to control defrost cycles: its maximum length (MdF) and two defrost modes: timed or controlled by the evaporator's probe (P2P).

### 3.3 AUXILIARY RELAY CONFIGURATION - TERM.5-6/7, PAR. OA1

The functioning of the auxiliary relay (terminals. 5-6/7) can be set by the **oA1** parameter, according to the kind of application. In the following paragraph the possible setting:

#### 3.3.1 Light relay - oA1= Lig

With oA1 = Lig, the 5-6/7 relay is set as light. It is activated by key or when i1F = dor.

#### 3.3.2 Alarm relay - oA1= AUS

There are 2 possibilities:

**a. Activation via digital input (oA1 = AUS, i1F or i2F = AUS)**

With oA1 = AUS and i2F or i1F = AUS the relay 5-6/7 is activated via digital input and remains ON until the digital input is activated or is silenced by pressing any key.

**b. Auxiliary thermostat (es. anti-sweat heaters)**

**Parameters involved:**
- **ACH** Type of regulation: heating/cooling;
- **SAA** Set point auxiliary relay
- **SHy** Differential for auxiliary relay
- **ArP** Probe for auxiliary relay
- **Sdd** Auxiliary output off during defrost

By means of these 5 parameters the functioning of the auxiliary relay can be set.

**NOTE:** Set **oA1 =AUS** and **ArP= nP** (no probe for auxiliary output).
In this case the relay 5-6/7 can be activated only by digital input with i1F or i2F = AUS.

#### 3.3.3 On/off relay – oA1 = onF

In this case the relay is activated when the controller is turned on and de-activated when the controller is in stand-by mode.

#### 3.3.4 Neutral zone regulation

With **oA1 = db** the relay 5-6/7 can control a heater element to perform a neutral zone action.
oA1 cut in = SET-HY
oA1 cut out = SET

#### 3.3.5 Second compressor

With **oA1 = CP2,** the relay 5-6/7 operates as second compressor: it is activated in parallel with the relay of the first compressor, with a possible delay set in the **AC1** parameter. Both the relays are switched off at the same time.

#### 3.3.6 Alarm relay

With **oA1 = ALr** the relay 5-6/7 operates as alarm relay. It is activated every time an alarm happens. Its status depends on the **tbA** parameter:
With "**tbA = y**", the relay is silenced by pressing any key.
With "**tbA = n**", the alarm relay remains on until the alarm condition recovers.

#### 3.3.7 Night blind management during energy saving cycles

With **oA1 = HES,** the relay 5-6/7 operates to manage the night blind: the relay is energised when the energy saving cycle is activated, by digital input, frontal button or RTC (optional).

## 4. FRONT PANEL COMMANDS

### 4.1 XW20LR:STANDARD FRONTAL PANEL

### 4.2 XW20LR: STEEL FINISHING

### 4.1 XW20LRH

SET: To display target set point; in programming mode it selects a parameter or confirm an operation.

**(DEF)** To start a manual defrost.

(**UP**): To see the max. stored temperature; in programming mode it browses the parameter codes or increases the displayed value.

(**DOWN**) To see the min stored temperature; in programming mode it browses the parameter codes or decreases the displayed value.

To switch the instrument off, if onF = oFF.

To switch the light, if oA1 = Lig.

**KEY COMBINATIONS:**

| | |
|---|---|
| ❄ + ▽ | To lock & unlock the keyboard. |
| SET + ▽ | To enter in programming mode. |
| SET + ❄ | To return to the room temperature display. |

### 4.2 USE OF LEDS

Each LED function is described in the following table.

| LED | MODE | FUNCTION |
|---|---|---|
| | ON | Compressor enabled |
| | Flashing | Anti-short cycle delay enabled |
| | ON | Defrost enabled |
| | Flashing | Drip time in progress |
| | ON | An alarm is occurring |
| | ON | Continuous cycle is running |
| | ON | Energy saving enabled |
| | ON | Light on |
| AUX | ON | Auxiliary relay on |
| °C | ON | Measurement unit |
| °C | Flashing | Programming phase |

## 5. MAX & MIN TEMPERATURE MEMORIZATION

### 5.1 HOW TO SEE THE MIN TEMPERATURE

1. Press and release the ▼ key.
2. The "Lo" message will be displayed followed by the minimum temperature recorded.
3. By pressing the ▼ key again or by waiting 5s the normal display will be restored.

### 5.2 HOW TO SEE THE MAX TEMPERATURE

1. Press and release the ▲ key.
2. The "Hi" message will be displayed followed by the maximum temperature recorded.
3. By pressing the ▲ key again or by waiting 5s the normal display will be restored.

### 5.3 HOW TO RESET THE MAX AND MIN TEMPERATURE RECORDED

1. Hold press the SET key for more than 3s, while the max. or min temperature is displayed. (rSt message will be displayed)
2. To confirm the operation the "rSt" message starts blinking and the normal temperature will be displayed.

## 6. MAIN FUNCTIONS

### 6.1 TO SET THE CURRENT TIME AND DAY (ONLY FOR INSTRUMENTS WITH RTC)

When the instrument is switched on, it's necessary to program the time and day.

1. Enter the Pr1 programming menu, by pushing the SET + ▼ keys for 3s.
2. The rtc parameter is displayed. Push the SET key to enter the real time clock menu.
3. The Hur (hour) parameter is displayed.
4. Push the SET and set current hour by the UP and Down keys, then push SET to confirm the value..
5. Repeat the same operations on the Min (minutes) and dAy (day) parameters.

**To exit:** Push SET+UP keys or wait for 15 sec without pushing any keys.

### 6.2 HOW TO SEE THE SET POINT

1. Push and immediately release the **SET** key: the display will show the Set point value;
2. Push and immediately release the **SET** key or wait for 5 seconds to display the probe value again.

### 6.3 HOW TO CHANGE THE SET POINT

1. Push the **SET** key for more than 2 seconds to change the Set point value;
2. The value of the set point will be displayed and the "**°C**" LED starts blinking;
3. To change the Set value push the ▲ or ▼ arrows within 10s.
4. To memorise the new set point value push the **SET** key again or wait 10s.

### 6.4 HOW TO START A MANUAL DEFROST

Push the **DEF** key for more than 2 seconds and a manual defrost will start.

### 6.5 HOW TO CHANGE A PARAMETER VALUE

To change the parameter's value operate as follows:

1. Enter the Programming mode by pressing the **Set** + ▼ keys for 3s (the "**°C**" LED starts blinking).
2. Select the required parameter. Press the "**SET**" key to display its value
3. Use "**UP**" or "**DOWN**" to change its value.
4. Press "**SET**" to store the new value and move to the following parameter.

**To exit**: Press **SET + UP** or wait 15s without pressing a key.

**NOTE**: the set value is stored even when the procedure is exited by waiting the time-out to expire.

### 6.6 THE HIDDEN MENU

The hidden menu Includes all the parameters of the instrument.

#### 6.6.1 HOW TO ENTER THE HIDDEN MENU

1. Enter the Programming mode by pressing the **Set** + ▼ keys for 3s (the "**°C**" LED starts blinking).
2. Released the keys, then push again the Set+▼ keys for more than 7s. The Pr2 label will be displayed immediately followed from the HY parameter.
   **NOW YOU ARE IN THE HIDDEN MENU.**
3. Select the required parameter.
4. Press the "**SET**" key to display its value
5. Use ▲ or ▼ to change its value.
6. Press "**SET**" to store the new value and move to the following parameter.

**To exit**: Press **SET +** ▲ or wait 15s without pressing a key.

**NOTE1:** if none parameter is present in Pr1, after 3s the "noP" message is displayed. Keep the keys pushed till the Pr2 message is displayed.

**NOTE2**: the set value is stored even when the procedure is exited by waiting the time-out to expire.

#### 6.6.2 HOW TO MOVE A PARAMETER FROM THE HIDDEN MENU TO THE FIRST LEVEL AND VICEVERSA.

Each parameter present in the HIDDEN MENU can be removed or put into "THE FIRST LEVEL" (user level) by pressing **"SET +** ▼**"**.

In HIDDEN MENU when a parameter is present in First Level the decimal point is on.

### 6.7 HOW TO LOCK THE KEYBOARD

1. Keep pressed for more than 3 s the **UP** + **DOWN** keys.
2. The "POF" message will be displayed and the keyboard will be locked. At this point it will be possible only to see the set point or the MAX o Min temperature stored
3. If a key is pressed more than 3s the "POF" message will be displayed.

### 6.8 TO UNLOCK THE KEYBOARD

Keep pressed together for more than 3s the ▲ and ▼ keys, till the **"Pon"** message will be displayed.

### 6.9 THE CONTINUOUS CYCLE

When defrost is not in progress, it can be activated by holding the "▲" key pressed for about 3 seconds. The compressor operates to maintain the "**ccS**" set point for the time set through the "**CCt**" parameter. The cycle can be terminated before the end of the set time using the same activation key "▲" for 3 seconds.

### 6.10 THE ON/OFF FUNCTION

With "**onF = oFF**", pushing the **ON/OFF** key, the instrument is switched off. The **"OFF"** message is displayed. In this configuration, the regulation is disabled.
To switch the instrument on, push again the ON/OFF key.

**WARNING: Loads connected to the normally closed contacts of the relays are always supplied and under voltage, even if the instrument is in stand by mode.**

## 7. PARAMETERS

**rtc Real time clock menu (only for controller with RTC):** to set the time and date and defrost start time.

**REGULATION**

**Hy Differential**: (0,1 ÷ 25,5°C / 1÷255 °F) Intervention differential for set point. Compressor Cut IN is Set Point + differential (Hy). Compressor Cut OUT is when the temperature reaches the set point.

**LS Minimum set point:** (- 50°C÷SET/-58°F÷SET): Sets the minimum value for the set point.

**US Maximum set point:** (SET÷110°C/ SET÷230°F). Set the maximum value for set point.

**Ot Thermostat probe calibration**: (-12.0÷12.0°C; -120÷120°F) allows to adjust possible offset of the thermostat probe.

**P2P Evaporator probe presence: n=** not present: the defrost stops by time; **y=** present: the defrost stops by temperature.

**OE Evaporator probe calibration:** (-12.0÷12.0°C; -120÷120°F). allows to adjust possible offset of the evaporator probe.

**P3P Third probe presence (P3): n=** not present:, the terminals 13-14 operate as digital input.; **y=** present:, the terminals 13-14 operate as third probe.

**O3 Third probe calibration (P3):** (-12.0÷12.0°C; -120÷120°F). allows to adjust possible offset of the third probe.

**OdS Outputs activation delay at start up:** (0÷255min) This function is enabled at the initial start up of the instrument and inhibits any output activation for the period of time set in the parameter.

**AC Anti-short cycle delay**: (0÷50 min) minimum interval between the compressor stop and the following restart.

**AC1 2nd compressor delay at start up** (0÷255s) Used only if oA3 = cP2 Time interval between the switching on of the first compressor and the second one.

**rtr Percentage of the second and first probe for regulation (0÷100; 100 = P1, 0 = P2 ):** it allows to set the regulation according to the percentage of the first and second probe, as for the following formula (rtr(P1-P2)/100 + P2).

**CCt Compressor ON time during continuous cycle:** (0.0÷24.0h; res. 10min) Allows to set the length of the continuous cycle: compressor stays on without interruption for the CCt time. Can be used, for instance, when the room is filled with new products.

**CCS Set point for continuous cycle:** (-50÷150°C) it sets the set point used during the continuous cycle.

**COn Compressor ON time with faulty probe:** (0÷255 min) time during which the compressor is active in case of faulty thermostat probe. With COn=0 compressor is always OFF.

**COF Compressor OFF time with faulty probe:** (0÷255 min) time during which the compressor is OFF in case of faulty thermostat probe. With COF=0 compressor is always active.

**CH Type of action:** CL = cooling; Ht = heating.

**DISPLAY**

**CF Temperature measurement unit: °C=**Celsius; **°F=**Fahrenheit. WARNING: When the measurement unit is changed the SET point and the values of the parameters Hy, LS, US, Ot, ALU and ALL have to be checked and modified if necessary).

**rES Resolution (for °C)**: (in = 1°C; dE = 0.1 °C) allows decimal point display.

**Lod Instrument display**: (P1; P2, P3, P4, SET, dtr): it selects which probe is displayed by the instrument: **P1** = Thermostat probe; **P2** = Evaporator probe; **P3** = Third probe(only for model with this option enabled); **P4** = Fourth probe, **SET** = set point; **dtr** = percentage of visualization.

**rEd X- REP display (*optional*)**: (P1; P2, P3, P4, SET, dtr): it selects which probe is displayed by X-REP: **P1** = Thermostat probe; **P2** = Evaporator probe; **P3** = Third probe(only for model with this option enabled); **P4** = Fourth probe, **SET** = set point; **dtr** = percentage of visualization.

**dLy Display delay:** (0 ÷20.0m; resul. 10s) when the temperature increases, the display is updated of 1 °C/1°F after this time.

**dtr Percentage of the second and first probe for visualization when Lod = dtr (0÷100; 100 = P1, 0 = P2 ): if Lod = dtr** it allows to set the visualization according to the percentage of the first and second probe, as for the following formula (dtr(P1-P2)/100 + P2).

**DEFROST**

**EdF Defrost mode (only for controller with RTC):**
**rtc = Real Time Clock mode**. Defrost time follows **Ld1÷Ld6** parameters on workdays and **Sd1÷Sd6** on holidays.

**in** = **interval mode**. The defrost starts when the time "**Idf**" is expired.

**dFP Probe selection for defrost termination: nP** = no probe; **P1** =thermostat probe; **P2 =** evaporator probe; **P3** =configurable probe; **P4** = fourth probe.

**dtE Defrost termination temperature**: (-50÷50 °C/ -58÷122°F) (Enabled only when EdF=Pb) sets the temperature measured by the evaporator probe, which causes the end of defrost.

**IdF Interval between defrost cycles**: (0÷120h) Determines the time interval between the beginning of two defrost cycles.

**MdF (Maximum) length for defrost**: (0÷255min) When **P2P = n**, (not evaporator probe: timed defrost) it sets the defrost duration, when **P2P = y** (defrost end based on temperature) it sets the maximum length for defrost.

**dFd Temperature displayed during defrost**: (**rt** = real temperature; **it** = temperature at defrost start; **SEt** = set point; **dEF** = "dEF" label)

**dAd MAX display delay after defrost**: (0÷120min). Sets the maximum time between the end of defrost and the restarting of the real room temperature display.

**AUXILIARY THERMOSTAT CONFIGURATION (terms. 5-67/) – OA1 = AUS**

**ACH Kind of regulation for auxiliary relay**: **Ht** = heating; **CL** = cooling

**SAA Set Point for auxiliary relay:** (-50,0÷110,0°C; -58÷230°F) it defines the room temperature set point to switch auxiliary relay.

**SHy Differential for auxiliary output:** (0,1 ÷ 25,5°C / 1÷255 °F) Intervention differential for auxiliary output set point.
**With ACH = cL** AUX Cut in is SAA + SHy; . AUX Cut out is SAA
**With ACH = Ht** AUX Cut in is SAA - SHy; . AUX Cut out is SAA

**ArP Probe selection for auxiliary**: **nP** = no probe, the auxiliary relay is switched only by button; **P1 =** Probe 1 (Thermostat probe); **P2 =** Probe 2 (evaporator probe); **P3 =** Probe 3 (display probe); **P4 =** Probe 4 fourth probe.

**Sdd Auxiliary relay off during defrost: n =** the auxiliary relay 5-6/7 operates during defrost.
**y =** the auxiliary relay 5-6/7 is switched off during defrost.

**ALARMS**

**ALP Probe selection for alarm: P1 =** Probe 1; **P2 =** Probe 2; **P3 =** Probe 3; **P4 =** Fourth probe.

**ALC Temperature alarms configuration:** (Ab; rE) **Ab**= absolute temperature: alarm temperature is given by the ALL or ALU values. **rE** = temperature alarms are referred to the set point. Temperature alarm is enabled when the temperature exceeds the "SET+ALU" or "SET-ALL" values.

**ALU MAXIMUM temperature alarm**: (SET÷110°C; SET÷230°F) when this temperature is reached the alarm is enabled, after the "ALd" delay time.

**ALL Minimum temperature alarm**: (-50.0 ÷ SET °C; -58÷230°F when this temperature is reached the alarm is enabled, after the "ALd" delay time.

**AFH Differential for temperature alarm recovery:** (0,1÷25,5°C; 1÷45°F) Intervention differential for recovery of temperature alarm.

**ALd Temperature alarm delay**: (0÷255 min) time interval between the detection of an alarm condition and alarm signalling.

**dAO Exclusion of temperature alarm at start-up**: (from 0.0 min to 23.5h) time interval between the detection of the temperature alarm condition after instrument power on and alarm signalling.

**CONDENSER TEMPERATURE ALARM**

**AP2 Probe selection for temperature alarm of condenser: nP** = no probe; **P1** =thermostat probe; **P2 =** defrost termination probe; **P3** =configurable probe; **P4** = fourth probe.

**AL2 Low temperature alarm of condenser**: (-55÷150°C) when this temperature is reached the LA2 alarm is signalled, possibly after the Ad2 delay.

**Au2 High temperature alarm of condenser**: (-55÷150°C) when this temperature is reached the HA2 alarm is signalled, possibly after the Ad2 delay.

**AH2 Differential for temperature condenser alarm recovery**: (0,1÷25,5°C; 1÷45°F)

**Ad2 Condenser temperature alarm delay**: (0÷255 min) time interval between the detection of the condenser alarm condition and alarm signalling.

**dA2 Condenser temperature alarm exclusion at start up**: (from 0.0 min to 23.5h, res. 10min)

**bLL Compressor off with low temperature alarm of condenser**: **n = no:** compressor keeps on working**; Y = yes,** compressor is switched off till the alarm is present, in any case regulation restarts after AC time at minimum.

**AC2 Compressor off with high temperature alarm of condenser**: **n = no:** compressor keeps on working**; Y = yes,** compressor is switched off till the alarm is present, in any case regulation restarts after AC time at minimum.

**AUXILIARY RELAY**

**tbA Alarm relay silencing (with oA1 =ALr):**
**n**= silencing disabled: alarm relay stays on till alarm condition lasts,
**y** =silencing enabled: alarm relay is switched OFF by pressing a key during an alarm

**oA1 Second relay configuration (5-6/7): dEF, FAn:** do not select it!. **ALr**: alarm; **Lig**: light; **AuS**: Auxiliary relay; **onF**: always on with instrument on; **db=** neutral zone; **cP2 =** second compressor; **dF2:** do not select it!;. **HES:**. night blind

**AoP Alarm relay polarity:** it set if the alarm relay is open or closed when an alarm happens. **CL**= terminals 1-4 closed during an alarm; **oP** = terminals 1-4 open during an alarm

**DIGITAL INPUTS**

**i1P Digital input polarity (13-14): oP:** the digital input is activated by opening the contact; **CL:** the digital input is activated by closing the contact.

**i1F Digital input configuration (13-14): EAL**= external alarm: "EA" message is displayed; **bAL**= serious alarm "CA" message is displayed. **PAL**= pressure switch alarm, "CA" message is displayed; **dor**= door switch function; **dEF**= activation of a defrost cycle; **AUS**= auxiliary relay for oA1 or oA4=AUS; **Htr**= kind of action inversion (cooling – heating); **FAn**= **not set it; ES**= Energy saving; **HdF** = Holiday defrost (enable only with RTC); **onF =** to switch the controller off.

**did** (0÷255 min) **with i1F= EAL or i1F = bAL digital input alarm delay (13-14):** delay between the detection of the external alarm condition and its signalling.
**with i1F= dor: door open signalling delay**
**with i1F= PAL: time for pressure switch function:** time interval to calculate the number of the pressure switch activation.

**i2P 2nd digital input polarity (13-19): oP:** the digital input is activated by opening the contact; **CL:** the digital input is activated by closing the contact.

**i2F 2nd digital input configuration (13-19): EAL**= external alarm: "EA" message is displayed; **bAL**= serious alarm "CA" message is displayed. **PAL**= pressure switch alarm, "CA" message is displayed; **dor**= door switch function; **dEF**= activation of a defrost cycle; **AUS**=not enabled; **Htr**= kind of action inversion (cooling – heating); **FAn**= **not set it; ES**= Energy saving; **HdF** = Holiday defrost (enable only with RTC); **onF =** to switch the controller off.

**d2d** (0÷255 min) **with i2F= EAL or i2F= bAL 2nd digital input alarm delay (13-19):** delay between the detection of the external alarm condition and its signalling.
**with i2F= dor: door open signalling delay**
**with i2F= PAL: time for pressure switch function:** time interval to calculate the number of the pressure switch activation.

**nPS Pressure switch number:** (0 ÷15) Number of activation of the pressure switch, during the "**did**" interval, before signalling the alarm event (I2F= PAL).
**If the nPS activation in the did time is reached, switch off and on the instrument to restart normal regulation.**

**odc Compressor status when open door: no, Fan** = normal; **CPr, F_C** = Compressor OFF.

**rrd Outputs restart after doA alarm: no=** outputs not affected by the doA alarm; **yES =** outputs restart with the doA alarm.

**HES Temperature increase during the Energy Saving cycle:** (-30,0°C÷30,0°C) it sets the increasing value of the set point during the Energy Saving cycle.

**TO SET CURRENT TIME AND WEEKLY HOLIDAYS (ONLY FOR MODELS WITH RTC)**

**Hur Current hour** (0 ÷ 23 h)

**Min Current minute** (0 ÷ 59min)

**dAY Current day** (Sun ÷ SAt)

**Hd1 First weekly holiday** (Sun ÷ nu) Set the first day of the week which follows the holiday times.

**Hd2 Second weekly holiday** (Sun ÷ nu) Set the second day of the week which follows the holiday times.

**N.B. Hd1,Hd2** can be set also as **"nu"** value (Not Used).

**TO SET ENERGY SAVING TIMES (ONLY FOR MODELS WITH RTC)**

**ILE Energy Saving cycle start during workdays**: (0 ÷ 23h 50 min.) During the Energy Saving cycle the set point is increased by the value in HES so that the operation set point is SET + HES.

**dLE Energy Saving cycle length during workdays**: (0 ÷ 24h 00 min.) Sets the duration of the Energy Saving cycle on workdays.

**ISE Energy Saving cycle start on holidays**. (0 ÷ 23h 50 min.)

**dSE Energy Saving cycle length on holidays** (0 ÷ 24h 00 min.)

**TO SET DEFROST TIMES (ONLY FOR MODELS WITH RTC)**

**Ld1÷Ld6 Workday defrost start** (0 ÷ 23h 50 min.) These parameters set the beginning of the 6 programmable defrost cycles during workdays. Ex. When **Ld2** = 12.4 the second defrost starts at 12.40 during workdays.

**Sd1÷Sd6 Holiday defrost start** (0 ÷ 23h 50 min.) These parameters set the beginning of the 6 programmable defrost cycles on holidays. Ex. When **Sd2** = 3.4 the second defrost starts at 3.40 on holidays.
**N.B. :To disable a defrost cycle set it to "nu"(not used).** ***Ex.*** *If **Ld6**=nu **;** the sixth defrost cycle is disabled*

**OTHER**

**Adr Serial address** (1÷244): Identifies the instrument address when connected to a ModBUS compatible monitoring system.

**PbC Type of probe:** it allows to set the kind of probe used by the instrument: **PTC** = PTC probe, **ntc =** NTC probe.

**onF on/off key enabling: nu =** disabled; **oFF =** enabled; **ES = not set it**.

**dP1 Thermostat probe display**

**dP2 Evaporator probe display**

**dP3 Third probe display**- ***optional***.

**rSE Real set point:** it shows the set point used during the energy saving cycle or during the continuous cycle.

**rEL Software release** for internal use**.**

**Ptb Parameter table code:** readable only**.**

## 8. DIGITAL INPUTS

The first digital input is enabled with P3P = n.
With P3P = n and i1F = i2F the second digital input is disabled
The free voltage digital inputs are programmable by the "**i1F**" and **i2F** parameters.

### 8.1 GENERIC ALARM (i1F or i2F = EAL)

As soon as the digital input is activated the unit will wait for "**did**" time delay before signalling the "**EAL**" alarm message. The outputs status don't change. The alarm stops just after the digital input is de-activated.

### 8.2 SERIOUS ALARM MODE (i1F or i2F = bAL)

When the digital input is activated, the unit will wait for "**did**" delay before signalling the "**CA**" alarm message. The relay outputs are switched OFF. The alarm will stop as soon as the digital input is de-activated.

### 8.3 PRESSURE SWITCH (i1F or i2F = PAL)

If during the interval time set by "**did**" parameter, the pressure switch has reached the number of activation of the "**nPS**" parameter, the "**CA**" pressure alarm message will be displayed. The compressor and the regulation are stopped. When the digital input is ON the compressor is always OFF. **If the nPS activation in the did time is reached, switch off and on the instrument to restart normal regulation.**

### 8.4 DOOR SWITCH INPUT (i1F or i2F = dor)

It signals the door status and the corresponding relay output status through the "**odc**" parameter: **no, Fan** = normal (any change); **CPr, F_C** = Compressor OFF.
Since the door is opened, after the delay time set through parameter "**did**", the door alarm is enabled, the display shows the message "**dA**" and **the regulation restarts is rtr = yES.** The alarm stops as soon as the external digital input is disabled again. With the door open, the high and low temperature alarms are disabled.

### 8.5 START DEFROST (i1F or i2F = dEF)

It starts a defrost if there are the right conditions. After the defrost is finished, the normal regulation will restart only if the digital input is disabled otherwise the instrument will wait until the "MdF" safety time is expired.

### 8.6 SWITCH THE AUXILIARY RELAY (i1F or i2F = AUS)

With oA1 = AUS the digital input switched the status of the auxiliary relay

### 8.7 ENERGY SAVING (i1F or i2F = ES)

The Energy Saving function allows to change the set point value as the result of the SET+ HES (parameter) sum. This function is enabled until the digital input is activated.

### 8.8 HOLIDAY DEFROST (i1F or i2F = HDF) –ONLY FOR MODELS WITH RTC

This function enabled the holiday defrost setting.

### 8.9 ON OFF FUNCTION (i1F or i2F = onF)

To switch the controller on and off.

### 8.10 DIGITAL INPUTS POLARITY

The digital input polarity depends on the "**i1P**" and **"i2P"** parameters.
**i1P or i2P =CL**: the input is activated by closing the contact.
**i1P or i2P=OP**: the input is activated by opening the contact

## 9. TTL SERIAL LINE – FOR MONITORING SYSTEMS

The TTL serial line, available through the HOT KEY connector, allows by means of the external TTL/RS485 converter, **XJ485-CX**, to connect the instrument to a monitoring system **ModBUS-RTU** compatible such as the X-WEB500/3000/300.

## 10. X-REP OUTPUT – OPTIONAL

As optional, an X-REP can be connected to the instrument, trough the HOY KEY connector. The X-REP output **EXCLUDES** the serial connection.

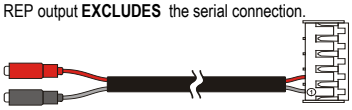

To connect the X-REP to the instrument the following connectors must be used CAB-51F(1m), CAB-52F(2m), CAB-55F(5m),

## 11. INSTALLATION AND MOUNTING

The controller shall be mounted on vertical panel, in a 150x31 mm hole, and fixed using two screws ∅ 3 x 2mm (only for XW20LR).
XW20LR: to obtain an IP65 protection grade use the front panel rubber gasket (mod. RG-L). The temperature range allowed for correct operation is 0 - 60 °C. Avoid places subject to strong vibrations, corrosive gases, excessive dirt or humidity. The same recommendations apply to probes. Let the air circulate by the cooling holes.

### 11.1 CUT OUT

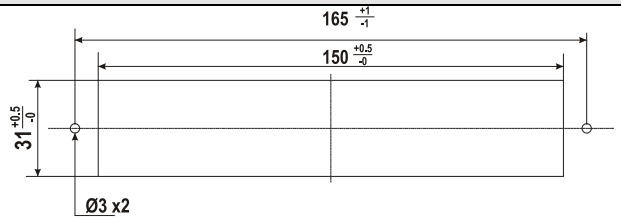


**XW20LRH**: the holes are not required

### 11.2 STEEL FINISHING MOUNTING

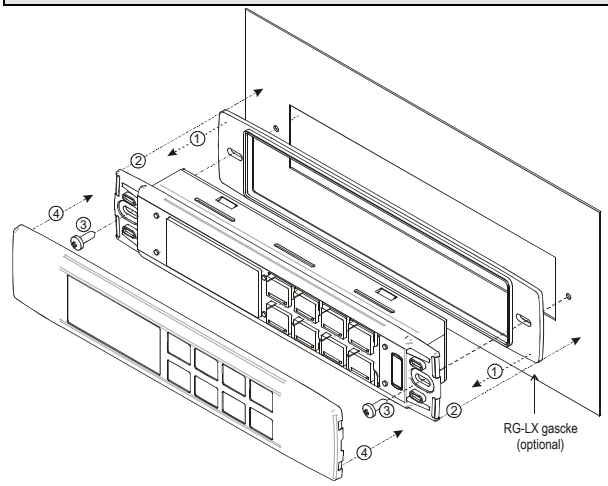


## 12. ELECTRICAL CONNECTIONS

The instruments are provided with screw terminal block to connect cables with a cross section up to 2,5 mm² for the digital and analogue inputs. Relays and power supply have a Faston connection (6,3mm). Heat-resistant cables have to be used. Before connecting cables make sure the power supply complies with the instrument's requirements. Separate the probe cables from the power supply cables, from the outputs and the power connections. Do not exceed the maximum current allowed on each relay, in case of heavier loads use a suitable external relay.
**N.B.** Maximum current allowed for all the loads is 20A.

### 12.1 PROBE CONNECTION

The probes shall be mounted with the bulb upwards to prevent damages due to casual liquid infiltration. It is recommended to place the thermostat probe away from air streams to correctly measure the average room temperature. Place the defrost termination probe among the evaporator fins in the coldest place, where most ice is formed, far from heaters or from the warmest place during defrost, to prevent premature defrost termination.

## 13. HOW TO USE THE HOT KEY

### 13.1 HOW TO PROGRAM A HOT KEY FROM THE INSTRUMENT (UPLOAD)

1. Program one controller with the front keypad.
2. When the controller is ON, insert the "**Hot key**" and push ▲ key; the **"uPL"** message appears followed a by flashing **"End"**
3. Push "**SET"** key and the **End** will stop flashing.
4. Turn OFF the instrument remove the **"Hot Key",** then turn it ON again.

**NOTE**: the "**Err**" message is displayed for failed programming. In this case push again ▲ key if you want to restart the upload again or remove the "**Hot key**" to abort the operation.

### 13.2 HOW TO PROGRAM AN INSTRUMENT USING A HOT KEY (DOWNLOAD)

1. Turn OFF the instrument.
2. Insert a **programmed "Hot Key" into the 5 PIN receptacle** and then turn the Controller ON.
3. Automatically the parameter list of the **"Hot Key"** is downloaded into the Controller memory, the "**doL**" message is blinking followed a by flashing **"End".**
4. After 10 seconds the instrument will restart working with the new parameters.
5. Remove the **"Hot Key"**..

**NOTE** the message "**Err**" is displayed for failed programming. In this case turn the unit off and then on if you want to restart the download again or remove the "**Hot key**" to abort the operation.

## 14. ALARM SIGNALS

| Message | Cause | Outputs |
|---|---|---|
| "P1" | Room probe failure | Compressor output acc. to par. "Con" and "COF" |
| "P2" | Second probe failure | Defrost end is timed |
| "P3" | Third probe failure | Outputs unchanged |
| "HA" | Maximum temperature alarm | Outputs unchanged. |
| "LA" | Minimum temperature alarm | Outputs unchanged. |
| "HA2" | Condenser high temperature | It depends on the "Ac2" parameter |
| "LA2" | Condenser low temperature | It depends on the "bLL" parameter |
| "dA" | Door open | Loads according to the "odC" parameter |
| "EA" | External alarm | Output unchanged. |
| "CA" | Serious external alarm (i1F=bAL) | All outputs OFF. |
| "CA" | Pressure switch alarm (i1F=PAL) | All outputs OFF |
| "rtc" | Real time clock alarm | Alarm output ON; Other outputs unchanged; Defrosts according to par. "IdF" Set real time clock has to be set |
| rtF | Real time clock board failure | Alarm output ON; Other outputs unchanged; Defrosts according to par. "IdF" Contact the service |

### 14.1 ALARM RECOVERY

Probe alarms **P1**", "**P2"** and "**P4**" start some seconds after the fault in the related probe; they automatically stop some seconds after the probe restarts normal operation. Check connections before replacing the probe.
Temperature alarms "**HA**", "**LA**" "**HA2**" and "**LA2**" automatically stop as soon as the temperature returns to normal values.
Alarms **"EA"** and **"CA"** (with i1F=bAL) recover as soon as the digital input is disabled.
Alarm "**CA"** (with i1F=PAL) recovers only by **switching off and on** the instrument.
Real time clock alarm **rtC,** it stops as soon as the correct hour and day are set.
Real time clock alarm **rtF**, the clock board has to be replaced. Contact the service.

### 14.2 OTHER MESSAGES

| | |
|---|---|
| **Pon** | Keyboard unlocked. |
| **PoF** | Keyboard locked |
| **noP** | **In programming mode**: none parameter is present in Pr1<br>**On the display** or in dP2, dP3, dP4: the selected probe is nor enabled |

## 15. TECHNICAL DATA

**Housing:** self extinguishing ABS.
**Case:** facia 38x185 mm; depth 40mm
**Mounting :** panel mounting in a 150x31 mm panel cut-out.
**Only for XW20LR** two screws. ∅ 3 x 2mm, distance between the holes 165mm
**Protection:** IP20; **Frontal protection:** IP65 with frontal gasket mod RG-L or RG-LX.
**Connections:** Screw terminal block ≤ 2,5 mm² heat-resistant wiring and 6,3mm Faston
**Power supply:** 230Vac or. 110Vac ± 10%, 50/60Hz.
**Power absorption:** 7VA max.
**Display**: 3 digits, red LED, 14,2 mm high.
**Inputs**: Up to 3 NTC or PTC probes.
**Digital inputs**: free voltage
**Relay outputs:** ***Total current on loads MAX. 20A***
**compressor:** relay SPST 20(8) A, 250Vac
**light:** relay SPST 8A, 250Vac
**Other output :** buzzer (optional)
**Serial output :** TTL standard; **Communication protocol:** Modbus - RTU
**Data storing**: on the non-volatile memory (EEPROM).
**Internal clock back-up:** 24 hours (only for model with RTC)
**Kind of action:** 1B; **Pollution grade:** normal; **Software class:** A.;
**Over voltage Category**: II
**Operating temperature:** 0÷60 °C; **Storage temperature:** -30÷85 °C.
**Relative humidity:** 20÷85% (no condensing)
**Measuring and regulation range: NTC probe:** -40÷110°C (-40÷230°F);
**PTC probe:** -50÷150°C (-58÷302°F)
**Resolution:** 0,1 °C or 1 °F (selectable); **Accuracy (ambient temp. 25°C)**: ±0,7 °C ±1 digit

## 16. CONNECTIONS

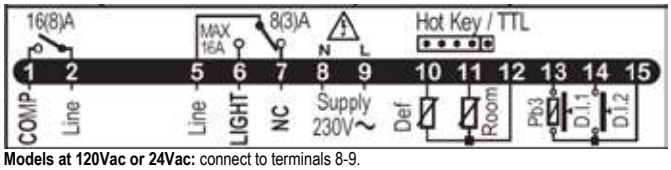


**Models at 120Vac or 24Vac:** connect to terminals 8-9.
**NOTE: on models with X-REP option, connect the X-REP to the HOT KEY receptacle**

## 17. DEFAULT SETTING VALUES

| Label | Name | Range | Value | Level |
|---|---|---|---|---|
| **Set** | Set point | LS - US | 3.0 | - - - |
| **rtc*** | Real time clock menu | | - | Pr1 |
| **Hy** | Differential | (0,1°C ÷ 25,5°C) | 2.0 | Pr1 |
| **LS** | Minimum set point | (-55,0°C ÷ SET) | -50.0 | Pr2 |
| **US** | Maximum set point | (SET ÷ 150,0°C) | 110 | Pr2 |
| **Ot** | P1 probe calibration | (-12,0°C ÷ 12,0°C) | 0.0 | Pr1 |
| **P2P** | P2 probe presence | n - Y | n | Pr1 |
| **OE** | P2 probe calibration | (-12,0°C ÷ 12,0°C) | 0.0 | Pr2 |
| **P3P** | P3 probe presence | n - Y | n | Pr2 |
| **O3** | P3 probe calibration | (-12,0°C ÷ 12,0°C) | 0 | Pr2 |
| **odS** | Outputs delay at start up | 0 ÷ 255 (min.) | 0 | Pr2 |
| **AC** | Anti-short cycle delay | 0 ÷ 50 (min.) | 1 | Pr1 |
| **Ac1** | Second compressor start delay | 0 ÷ 255 (sec.) | 5 | Pr2 |
| **rtr** | P1-P2 percentage for regulation | 0 ÷ 100 (100=P1 , 0=P2) | 100 | Pr2 |
| **CCt** | Continuous cycle duration | 0 ÷ 24H0(144) | 0.0 | Pr2 |
| **CCS** | Set point for continuous cycle | (-55.0°C ÷ 150,0°C) | 3.0 | Pr2 |
| **COn** | Compressor ON time with faulty probe | 0 ÷ 255 (min.) | 15 | Pr2 |
| **COF** | Compressor OFF time with faulty probe | 0 ÷ 255 (min.) | 30 | Pr2 |
| **CH** | Kind of action | cL, Ht | cL | Pr1 |
| **CF** | Temperature measurement unit | °C - °F | °C | Pr2 |
| **rES** | Resolution | dE – in | dE | Pr1 |
| **Lod** | Probe displayed | P1 - P2 - P3 - P4 - SEt – dtr | P1 | Pr2 |
| **rEd**[2] | X-REP display | P1 - P2 - P3 - P4 - SEt – dtr | P1 | Pr2 |
| **dLy** | Display temperature delay | 0 ÷ 20.0min (ris. 10 sec.) | 0.0 | Pr2 |
| **dtr** | P1-P2 percentage for display | 1 ÷ 99 | 50 | Pr2 |
| **EdF*** | Kind of interval for defrost | rtc÷in | in | Pr2 |
| **dFP** | Probe selection for defrost termination | nP - P1 - P2 – P3 - P4 | nP | Pr2 |
| **dtE** | Defrost termination temperature | (-55.0°C ÷ 50.0°C) | 3,0 | Pr1 |
| **IdF** | Interval between defrost cycles | 0 ÷ 120 (h) | 8 | Pr1 |
| **MdF** | (Maximum) length for defrost | 0 ÷ 255 (min.) | 20 | Pr1 |
| **dFd** | Displaying during defrost | rt - it - SEt – dEF | it | Pr2 |
| **dAd** | MAX display delay after defrost | 0 ÷ 255 (min.) | 30 | Pr2 |
| **ACH** | Kind of action for auxiliary relay | CL – Ht | cL | Pr2 |
| **SAA** | Set Point for auxiliary relay | (-55.0°C ÷ 150,0°C) | 0,0 | Pr2 |
| **SHy** | Differential for auxiliary relay | (0,1°C ÷ 25,5°C) | 2,0 | Pr2 |
| **ArP** | Probe selection for auxiliary relay | nP - P1 - P2 - P3 – P4 | nP | Pr2 |
| **Sdd** | Auxiliary relay operating during defrost | n – Y | n | Pr2 |
| **ALP** | Alarm probe selection | nP - P1 - P2 - P3 – P4 | P1 | Pr2 |
| **ALc** | Temperat. alarms configuration | rE – Ab | Ab | Pr2 |
| **ALU** | MAXIMUM temperature alarm | ALc=rE: 0.0÷ 50.0°C<br>ALc=Ab: ALL÷150°C | 110,0 | Pr1 |
| **ALL** | Minimum temperature alarm | ALc = rE: 0.0÷50.0°C; ALc=Ab: -55°C÷ALU | -50,0 | Pr1 |
| **AFH** | Differential for temperat. alarm recovery | (0,1°C ÷ 25,5°C) | 2,0 | Pr2 |
| **ALd** | Temperature alarm delay | 0 ÷ 255 (min.) | 15 | Pr2 |
| **dAO** | Delay of temperature alarm at start up | 0 ÷ 24.0 h ris. 10min | 1,3 | Pr2 |
| **AP2** | Probe for temperat. alarm of condenser | nP - P1 - P2 - P3 – P4 | nP | Pr2 |
| **AL2** | Condenser for low temperat. alarm | (-55.0°C ÷ 150,0°C) | -40 | Pr2 |
| **AU2** | Condenser for high temperat. alarm | (-55.0°C ÷ 150,0°C) | 110 | Pr2 |
| **AH2** | Differ. for condenser temp. alar. recovery | (0,1°C ÷ 25,5°C) | 5 | Pr2 |
| **Ad2** | Condenser temperature alarm delay | 0 ÷ 255 (min.) | 15 | Pr2 |
| **dA2** | Delay of cond. temper. alarm at start up | 0 ÷ 24H0(144) | 1,3 | Pr2 |
| **bLL** | Compr. off for condenser low temperature alarm | n – Y | n | Pr2 |
| **AC2** | Compr. off for condenser high temperature alarm | n – Y | n | Pr2 |
| **tbA** | Alarm relay disabling | n – Y | y | Pr2 |
| **oA1** | Second relay configuration | dEF - FAn - ALr - LiG - AUS - OnF - db - CP2 - dF2 – HES | Lig | Pr2 |
| **AoP** | Alarm relay polarity | OP – CL | cL | Pr2 |
| **i1P** | Digital input polarity | OP – CL | cL | Pr1 |
| **i1F** | Digital input 1 configuration | EAL - bAL - PAL - dor - dEF - AUS - Htr - FAn - ES-HdF – onF | dor | Pr1 |
| **did** | Digital input alarm delay | 0 ÷ 255 (min.) | 15 | Pr1 |
| **i2P** | Digital input polarity | OP – CL | cL | Pr2 |
| **i2F** | Digital input configuration | EAL - bAL - PAL - dor - dEF - AUS - Htr - FAn - ES-HdF – onF | EAL | Pr2 |
| **d2d** | Digital input alarm delay | 0 ÷ 255 (min.) | 5 | Pr2 |
| **Nps** | Number of activation of pressure switch | 0 ÷ 15 | 15 | Pr2 |
| **odc** | Compress status when open door | no - FAn - CPr - F-C | F-c | Pr2 |
| **rrd** | Regulation restart with door open alarm | n - Y | y | Pr2 |
| **HES** | Differential for Energy Saving | (-30°C ÷ 30°C) | 0 | Pr2 |
| **Hur*** | Current hour | Read only | - | rtc |
| **Min*** | Current minute | Read only | - | rtc |
| **dAY*** | Current day | Read only | - | rtc |
| **Hd1*** | First weekly holiday | Sun ÷ SAt – nu | nu | rtc |
| **Hd2*** | Second weekly holiday | Sun ÷ SAt – nu | nu | rtc |
| **ILE*** | Energy Saving cycle start during workdays | 0 ÷ 23h5 | 0 | rtc |
| **dLE*** | Energy Saving cycle length during workdays | 0 ÷ 24h0 | 0 | rtc |
| **ISE*** | Energy Saving cycle start on holidays | 0 ÷ 23h5 | 0 | rtc |
| **dSE*** | Energy Saving cycle length on holidays | 0 ÷ 24h0 | 0 | rtc |
| **Ld1*** | 1st workdays defrost start | 0 ÷ 23H5;- nu | 6.0 | rtc |
| **Ld2*** | 2nd workdays defrost start | 0 ÷ 23H5;- nu | 13.0 | rtc |
| **Ld3*** | 3rd workdays defrost start | 0 ÷ 23H5;- nu | 21.0 | rtc |
| **Ld4*** | 4th workdays defrost start | 0 ÷ 23H5;- nu | 0.0 | rtc |
| **Ld5*** | 5th workdays defrost start | 0 ÷ 23H5;- nu | 0.0 | rtc |
| **Ld6*** | 6th workdays defrost start | 0 ÷ 23H5;- nu | 0.0 | rtc |
| **Sd1*** | 1st holiday defrost start | 0 ÷ 23H5;- nu | 6.0 | rtc |
| **Sd2*** | 2nd holiday defrost start | 0 ÷ 23H5;- nu | 13.0 | rtc |
| **Sd3*** | 3rd holiday defrost start | 0 ÷ 23H5;- nu | 21.0 | rtc |
| **Sd4*** | 4th holiday defrost start | 0 ÷ 23H5;- nu | 0.0 | rtc |
| **Sd5*** | 5th holiday defrost start | 0 ÷ 23H5;- nu | 0.0 | rtc |
| **Sd6*** | 6th holiday defrost start | 0 ÷ 23H5;- nu | 0.0 | rtc |
| **Adr** | Serial address | 1 ÷ 247 | 1 | Pr2 |
| **PbC** | Kind of probe | PtC - ntC | ntc | Pr2 |
| **onF** | on/off key enabling | nu - OFF – ES | oFF | Pr2 |
| **dP1** | Room probe display | Probe value | - | Pr2 |
| **dP2** | Evaporator probe display | Probe value | - | Pr2 |
| **dP3** | Third probe display | Probe value | - | Pr2 |
| **rSE** | Real set point | Read only | - | Pr2 |
| **rEL** | Software release | Read only | 1.8 | Pr2 |
| **Ptb** | Map code | Read only | | Pr2 |

**2 Only for model with X-REP output**
*** Only for model with real time clock**

Dixell
EMERSON Climate Technologies
Dixell S.r.l. - Z.I. Via dell'Industria, 27 - 32010 Pieve d'Alpago (BL) ITALY
Tel. +39.0437.9833 r.a. - Fax +39.0437.989313 - EmersonClimate.com/Dixell - dixell@emerson.com

# Digital controller with defrost, fans and auxiliary relay management

# XW60LR –XW60LRH

## 1. GENERAL WARNING

### 1.1 PLEASE READ BEFORE USING THIS MANUAL

- This manual is part of the product and should be kept near the instrument for easy and quick reference.
- The instrument shall not be used for purposes different from those described hereunder. It cannot be used as a safety device.
- Check the application limits before proceeding.
- Dixell Srl reserves the right to change the composition of its products, even without notice, ensuring the same and unchanged functionality.

### 1.2 ⚠ SAFETY PRECAUTIONS

- Check the supply voltage is correct before connecting the instrument.
- Do not expose to water or moisture: use the controller only within the operating limits avoiding sudden temperature changes with high atmospheric humidity to prevent formation of condensation
- Warning: disconnect all electrical connections before any kind of maintenance.
- Fit the probe where it is not accessible by the End User. The instrument must not be opened.
- In case of failure or faulty operation send the instrument back to the distributor or to "Dixell S.r.l." (see address) with a detailed description of the fault.
- Consider the maximum current which can be applied to each relay (see Technical Data).
- Ensure that the wires for probes, loads and the power supply are separated and far enough from each other, without crossing or intertwining.
- In case of applications in industrial environments, the use of mains filters (our mod. FT1) in parallel with inductive loads could be useful.
- Dixell Srl reserves the right to change the composition of its products, even without notice, ensuring the same and unchanged functionality.

## 2. GENERAL DESCRIPTION

Models **XW60LR, XW60LRH** , format 38x185mm, are microprocessor based controller, suitable for applications on medium or low temperature ventilated refrigerating units. It has 4 relay outputs to control compressor, fan and defrost, which can be either electrical or reverse cycle (hot gas) It could be provided with a Real Time Clock which allows programming of up to 6 daily defrost cycles, divided into holidays and workdays. A "Day and Night" function with two different set points is fitted for energy saving. It is also provided with up to three NTC or PTC probe inputs, the first one for temperature control, the second one, to be located onto the evaporator, to control the defrost termination temperature and to managed the fan. Third probe can operates as digital input.
The HOT KEY output allows to connect the unit, by means of the external module XJ485-CX, to a network line **ModBUS-RTU** compatible such as the dixell monitoring units of X-WEB family. It allows to program the controller by means the HOT KEY programming keyboard.
The instrument is fully configurable through special parameters that can be easily programmed through the keyboard.

## 3. CONTROLLING LOADS

### 3.1 COMPRESSOR

The regulation is performed according to the temperature measured by the thermostat probe with a positive differential from the set point: if the temperature increases and reaches set point plus differential the compressor is started and then turned off when the temperature reaches the set point value again.

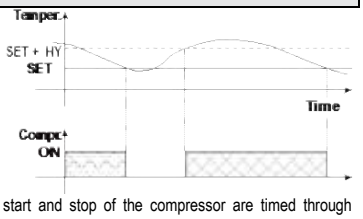


In case of fault in the thermostat probe the start and stop of the compressor are timed through parameters "**COn**" and "**COF**".

### 3.2 DEFROST

Two defrost modes are available through the "**tdF**" parameter: defrost through electrical heater (**tdF = EL**) and hot gas defrost (**tdF = in**).
The defrost interval depends on the presence of the RTC (optional). If the RTC is present is controlled by means of parameter "**EdF**":
- with EdF=in the defrost is made every "**IdF**" time – standard way for controller without RTC.
- with EdF = "rtc", the defrost is made in real time depending on the hours set in the parameters **Ld1..Ld6** on workdays and in **Sd1…Sd6** in holidays;

Other parameters are used to control defrost cycles: its maximum length (MdF) and two defrost modes: timed or controlled by the evaporator's probe (P2P).
At the end of defrost dripping time is started, its length is set in the Fdt parameter. With Fdt =0 the dripping time is disabled.

### 3.3 CONTROL OF EVAPORATOR FANS

The fan control mode is selected by means of the "**FnC**" parameter:
**FnC = C_n:** fans will switch ON and OFF with the compressor and **not run** during defrost;
**FnC = o_n** fans will run even if the compressor is off, and not run during defrost;
After defrost, there is a timed fan delay allowing for drip time, set by means of the "**Fnd**" parameter.
**FnC = C_Y** fans will switch ON and OFF with the compressor and **run** during defrost;
**FnC = o_Y** fans will run continuously also during defrost

An additional parameter "**FSt**" provides the setting of temperature, detected by the evaporator probe, above which the fans are always OFF. This is used to make sure circulation of air only if his temperature is lower than set in "FSt".

#### 3.3.1 Forced activation of fans

This function managed by the **Fct** parameter is designed to avoid short cycles of fans, that could happen when the controller is switched on or after a defrost, when the room air warms the evaporator.
**Functioning:** if the difference of temperature between the evaporator and the room probes is more than the value of the Fct parameter, the fans are switched on. With Fct=0 the function is disabled.

#### 3.3.2 Cyclical activation of the fans with compressor off.

When Fnc = c-n or c-Y (fans in parallel to the compressor), by means of the Fon and FoF parameters the fans can carry out on and off cycles even if the compressor is switched off. When the compressor is stopped the fans go on working for the Fon time. With Fon =0 the fans remain always off, when the compressor is off.

### 3.4 AUXILIARY RELAY CONFIGURATION - TERM.3-5, PAR. OA3

The functioning of the auxiliary relay (terminals. 3-5) can be set by the **oA3** parameter, according to the kind of application. In the following paragraph the possible setting:

#### 3.4.1 Light relay - oA3= Lig

With oA3 = Lig, the 3-5 relay is set as light. It is activated by key or when i1F = dor.

#### 3.4.2 Alarm relay – oA3= AUS

There are 2 possibilities:

**a. Activation via digital input (oA3= AUS, i1F or i2F = AUS)**

With oA3 = AUS and i2F or i1F = AUS the relay 3-5 is activated via digital input and remains ON until the digital input is activated or is silenced by pressing any key.

**b. Auxiliary thermostat (es. anti-sweat heaters)**

**Parameters involved:**
- **ACH** Type of regulation: heating/cooling;
- **SAA** Set point auxiliary relay
- **SHy** Differential for auxiliary relay
- **ArP** Probe for auxiliary relay
- **Sdd** Auxiliary output off during defrost

By means of these 5 parameters the functioning of the auxiliary relay can be set.
**NOTE:** Set **oA3=AUS** and **ArP= nP** (no probe for auxiliary output).
In this case the relay 3-5 can be activated only by digital input with i1F or i2F = AUS.

#### 3.4.3 On/off relay – oA3 = onF

In this case the relay is activated when the controller is turned on and de-activated when the controller is in stand-by mode.

#### 3.4.4 Neutral zone regulation

With **oA3 = db** the relay 3-5 can control a heater element to perform a neutral zone action.
oA3 cut in = SET-HY
oA3 cut out = SET

#### 3.4.5 Alarm relay

With **oA3 = ALr** the relay 3-5 operates as alarm relay. It is activated every time an alarm happens. Its status depends on the **tbA** parameter:
With "**tbA = y**", the relay is silenced by pressing any key.
With "**tbA = n**", the alarm relay remains on until the alarm condition recovers.

#### 3.4.6 Night blind management during energy saving cycles

With **oA3 = HES,** the relay 3-5 operates to manage the night blind: the relay is energised when the energy saving cycle is activated, by digital input, frontal button or RTC (optional).

## 4. FRONT PANEL COMMANDS

### 4.1 XW60LR - STANDARD FRONTAL PANEL

### 4.2 XW60LR - STEEL FINISHING

### 4.3 XW60LRH

SET: To display target set point; in programming mode it selects a parameter or confirm an operation.

**(DEF)** To start a manual defrost

(**UP**): To see the max. stored temperature; in programming mode it browses the parameter codes or increases the displayed value.

(**DOWN**) To see the min stored temperature; in programming mode it browses the parameter codes or decreases the displayed value.

To switch the instrument off, if onF = oFF.

To switch the light, if oA3 = Lig.

**KEY COMBINATIONS:**

| | |
|---|---|
| ❄ ▲ + ▼ | To lock & unlock the keyboard. |
| SET + ▼ | To enter in programming mode. |
| SET + ❄ ▲ | To return to the room temperature display. |

## 4.4 USE OF LEDS

Each LED function is described in the following table.

| LED | MODE | FUNCTION |
|---|---|---|
| ❄ | ON | Compressor enabled |
| ❄ | Flashing | Anti-short cycle delay enabled |
| ❄ | ON | Defrost enabled |
| ❄ | Flashing | Drip time in progress |
| | ON | Fans enabled |
| | Flashing | Fans delay after defrost in progress. |
| | ON | An alarm is occurring |
| | ON | Continuous cycle is running |
| | ON | Energy saving enabled |
| | ON | Light on |
| AUX | ON | Auxiliary relay on |
| °C | ON | Measurement unit |
| °C | Flashing | Programming phase |

# 5. MAX & MIN TEMPERATURE MEMORIZATION

## 5.1 HOW TO SEE THE MIN TEMPERATURE

1. Press and release the ▼ key.
2. The "Lo" message will be displayed followed by the minimum temperature recorded.
3. By pressing the ▼ key again or by waiting 5s the normal display will be restored.

## 5.2 HOW TO SEE THE MAX TEMPERATURE

1. Press and release the ▲ key.
2. The "Hi" message will be displayed followed by the maximum temperature recorded.
3. By pressing the ▲ key again or by waiting 5s the normal display will be restored.

## 5.3 HOW TO RESET THE MAX AND MIN TEMPERATURE RECORDED

1. Hold press the SET key for more than 3s, while the max. or min temperature is displayed. (rSt message will be displayed)
2. To confirm the operation the "rSt" message starts blinking and the normal temperature will be displayed.

# 6. MAIN FUNCTIONS

## 6.1 TO SET THE CURRENT TIME AND DAY (ONLY FOR INSTRUMENTS WITH RTC)

When the instrument is switched on, it's necessary to program the time and day.

1. Enter the Pr1 programming menu, by pushing the SET + ▼ keys for 3s.
2. The rtc parameter is displayed. Push the SET key to enter the real time clock menu.
3. The Hur (hour) parameter is displayed.
4. Push the SET and set current hour by the UP and Down keys, then push SET to confirm the value..
5. Repeat the same operations on the Min (minutes) and dAy (day) parameters.

**To exit:** Push SET+UP keys or wait for 15 sec without pushing any keys.

## 6.2 HOW TO SEE THE SET POINT

SET

1. Push and immediately release the **SET** key: the display will show the Set point value;
2. Push and immediately release the **SET** key or wait for 5 seconds to display the probe value again.

## 6.3 HOW TO CHANGE THE SET POINT

1. Push the **SET** key for more than 2 seconds to change the Set point value;
2. The value of the set point will be displayed and the "**°C**" LED starts blinking;
3. To change the Set value push the ▲ or ▼ arrows within 10s.
4. To memorise the new set point value push the **SET** key again or wait 10s.

## 6.4 HOW TO START A MANUAL DEFROST

Push the **DEF** key for more than 2 seconds and a manual defrost will start.

## 6.5 HOW TO CHANGE A PARAMETER VALUE

To change the parameter's value operate as follows:

1. Enter the Programming mode by pressing the **Set** + ▼ keys for 3s (the "**°C**" LED starts blinking).
2. Select the required parameter. Press the "**SET**" key to display its value
3. Use "**UP**" or "**DOWN**" to change its value.
4. Press "**SET**" to store the new value and move to the following parameter.

**To exit**: Press **SET + UP** or wait 15s without pressing a key.

**NOTE**: the set value is stored even when the procedure is exited by waiting the time-out to expire.

## 6.6 THE HIDDEN MENU

The hidden menu Includes all the parameters of the instrument.

### 6.6.1 HOW TO ENTER THE HIDDEN MENU

1. Enter the Programming mode by pressing the **Set** + ▼ keys for 3s (the "**°C" or "°F"** LED starts blinking).
2. Released the keys, then push again the Set+ ▼ keys for more than 7s. The Pr2 label will be displayed immediately followed from the HY parameter.
   **NOW YOU ARE IN THE HIDDEN MENU.**
3. Select the required parameter.
4. Press the "**SET**" key to display its value
5. Use ▲ or ▼ to change its value.
6. Press "**SET**" to store the new value and move to the following parameter.

**To exit**: Press **SET +** ▲ or wait 15s without pressing a key.

**NOTE1:** if none parameter is present in Pr1, after 3s the "noP" message is displayed. Keep the keys pushed till the Pr2 message is displayed.

**NOTE2**: the set value is stored even when the procedure is exited by waiting the time-out to expire.

### 6.6.2 HOW TO MOVE A PARAMETER FROM THE HIDDEN MENU TO THE FIRST LEVEL AND VICEVERSA.

Each parameter present in the HIDDEN MENU can be removed or put into "THE FIRST LEVEL" (user level) by pressing **"SET +** ▼**"**.

In HIDDEN MENU when a parameter is present in First Level the decimal point is on.

## 6.7 HOW TO LOCK THE KEYBOARD

1. Keep pressed for more than 3 s the **UP** + **DOWN** keys.
2. The "POF" message will be displayed and the keyboard will be locked. At this point it will be possible only to see the set point or the MAX o Min temperature stored
3. If a key is pressed more than 3s the "POF" message will be displayed.

## 6.8 TO UNLOCK THE KEYBOARD

Keep pressed together for more than 3s the ▲ and ▼ keys, till the **"Pon"** message will be displayed.

## 6.9 THE CONTINUOUS CYCLE

When defrost is not in progress, it can be activated by holding the "▲" key pressed for about 3 seconds. The compressor operates to maintain the "**ccS**" set point for the time set through the "**CCt**" parameter. The cycle can be terminated before the end of the set time using the same activation key "▲" for 3 seconds.

## 6.10 THE ON/OFF FUNCTION

With "**onF = oFF**", pushing the **ON/OFF** key, the instrument is switched off. The **"OFF"** message is displayed. In this configuration, the regulation is disabled.
To switch the instrument on, push again the ON/OFF key.

**WARNING: Loads connected to the normally closed contacts of the relays are always supplied and under voltage, even if the instrument is in stand by mode.**

# 7. PARAMETERS

**rtc Real time clock menu (only for controller with RTC):** to set the time and date and defrost start time.

**REGULATION**

**Hy Differential**: (0,1 ÷ 25,5°C / 1÷255 °F) Intervention differential for set point. Compressor Cut IN is Set Point + differential (Hy). Compressor Cut OUT is when the temperature reaches the set point.

**LS Minimum set point:** (- 50°C÷SET/-58°F÷SET): Sets the minimum value for the set point.

**US Maximum set point:** (SET÷110°C/ SET÷230°F). Set the maximum value for set point.

**Ot Thermostat probe calibration**: (-12.0÷12.0°C; -120÷120°F) allows to adjust possible offset of the thermostat probe.

**P2P Evaporator probe presence: n**= not present: the defrost stops by time; **y=** present: the defrost stops by temperature.

**OE Evaporator probe calibration:** (-12.0÷12.0°C; -120÷120°F). allows to adjust possible offset of the evaporator probe.

**P3P Third probe presence (P3): n**= not present:, the terminals 13-14 operate as digital input.; **y=** present:, the terminals 13-14 operate as third probe.

**O3 Third probe calibration (P3):** (-12.0÷12.0°C; -120÷120°F). allows to adjust possible offset of the third probe.

**OdS Outputs activation delay at start up:** (0÷255min) This function is enabled at the initial start up of the instrument and inhibits any output activation for the period of time set in the parameter.

**AC Anti-short cycle delay**: (0÷50 min) minimum interval between the compressor stop and the following restart.

**rtr Percentage of the second and first probe for regulation (0÷100; 100 = P1, 0 = P2 ):** it allows to set the regulation according to the percentage of the first and second probe, as for the following formula (rtr(P1-P2)/100 + P2).

**CCt Compressor ON time during continuous cycle:** (0.0÷24.0h; res. 10min) Allows to set the length of the continuous cycle: compressor stays on without interruption for the CCt time. Can be used, for instance, when the room is filled with new products.

**CCS Set point for continuous cycle:** (-50÷150°C) it sets the set point used during the continuous cycle.

**COn Compressor ON time with faulty probe:** (0÷255 min) time during which the compressor is active in case of faulty thermostat probe. With COn=0 compressor is always OFF.

**COF Compressor OFF time with faulty probe:** (0÷255 min) time during which the compressor is OFF in case of faulty thermostat probe. With COF=0 compressor is always active.

**DISPLAY**

**CF Temperature measurement unit: °C=**Celsius; **°F=**Fahrenheit. WARNING: When the measurement unit is changed the SET point and the values of the parameters Hy, LS, US, Ot, ALU and ALL have to be checked and modified if necessary).

**rES Resolution (for °C)**: (in = 1°C; dE = 0.1 °C) allows decimal point display.

**Lod Instrument display**: (P1; P2, P3, P4, SET, dtr): it selects which probe is displayed by the instrument: **P1** = Thermostat probe; **P2** = Evaporator probe; **P3** = Third probe(only for model with this option enabled); **P4** = NOT SET IT, **SET** = set point; **dtr** = percentage of visualization.

**rEd X- REP display (*optional*)**: (P1; P2, P3, P4, SET, dtr): it selects which probe is displayed by X-REP: **P1** = Thermostat probe; **P2** = Evaporator probe; **P3** = Third probe(only for model with this option enabled); **P4** = NOT SET IT, **SET** = set point; **dtr** = percentage of visualization.

**dLy Display delay:** (0 ÷20.0m; resul. 10s) when the temperature increases, the display is updated of 1 °C/1°F after this time.

**dtr Percentage of the second and first probe for visualization when Lod = dtr (0÷100; 100 = P1, 0 = P2 ): if Lod = dtr** it allows to set the visualization according to the percentage of the first and second probe, as for the following formula (dtr(P1-P2)/100 + P2).

**DEFROST**

**EdF Defrost mode (only for controller with RTC):**
**rtc** = **Real Time Clock mode**. Defrost time follows **Ld1÷Ld6** parameters on workdays and **Sd1÷Sd6** on holidays.
**in** = **interval mode**. The defrost starts when the time "**Idf**" is expired.

**tdF Defrost type**: **EL** = electrical heater; **in** = hot gas

**dFP Probe selection for defrost termination: nP** = no probe; **P1** =thermostat probe; **P2 =** evaporator probe; **P3** =configurable probe; **P4** = NOT SET IT.

**dtE Defrost termination temperature**: (-50÷50 °C/ -58÷122°F) sets the temperature measured by the evaporator probe, which causes the end of defrost.

**IdF Interval between defrost cycles**: (0÷120h) Determines the time interval between the beginning of two defrost cycles.

**MdF (Maximum) length for defrost**: (0÷255min) When **P2P = n**, (not evaporator probe: timed defrost) it sets the defrost duration, when **P2P = y** (defrost end based on temperature) it sets the maximum length for defrost.

**dSd Start defrost delay**: ( 0÷59min) This is useful when different defrost start times are necessary to avoid overloading the plant.

**dFd Temperature displayed during defrost**: (**rt** = real temperature; **it** = temperature at defrost start; **SEt** = set point; **dEF** = "dEF" label)

**dAd MAX display delay after defrost**: (0÷120min). Sets the maximum time between the end of defrost and the restarting of the real room temperature display.

**Fdt Drip time**: (0÷120 min) time interval between reaching defrost termination temperature and the restoring of the control's normal operation. This time allows the evaporator to eliminate water drops that might have formed due to defrost.

**dPo First defrost after start-up**: (y = immediately; n = after the IdF time)

**dAF Defrost delay after continuous cycle**: (0÷23.5h) time interval between the end of the fast freezing cycle and the following defrost related to it.

**FANS**

**FnC Fans operating mode**: **C-n**= runs with the compressor, OFF during defrost;
**o-n** = continuous mode, OFF during defrost;
**C-Y** = runs with the compressor, ON during defrost;
**o-Y** = continuous mode, ON during defrost;

**Fnd Fans delay after defrost:** (0÷255min) Interval between end of defrost and evaporator fans start.

**Fct Temperature differential avoiding short cycles of fans** (0÷59°C; Fct=0 function disabled). If the difference of temperature between the evaporator and the room probes is more than the value of the Fct parameter, the fans are switched on.

**FSt Fans stop temperature**: (-50÷50°C/122°F) setting of temperature, detected by evaporator probe, above which fans are always OFF.

**Fon Fan ON time:** (0÷15 min) **with** Fnc = C_n or C_y, (fan activated in parallel with compressor). it sets the evaporator fan ON cycling time when the compressor is off. With Fon =0 and FoF ≠ 0 the fan are always off, with Fon=0 and FoF =0 the fan are always off.

**FoF Fan OFF time:** (0÷15 min) **with** Fnc = C_n or C_y, (fan activated in parallel with compressor). it sets the evaporator fan off cycling time when the compressor is off. With Fon =0 and FoF ≠ 0 the fan are always off, with Fon=0 and FoF =0 the fan are always off.

**FAP Probe selection for fan management: nP** = no probe; **P1** =thermostat probe; **P2 =** evaporator probe; **P3** =configurable probe; **P4** = NOT SET IT.

**AUXILIARY RELAY CONFIGURATION (terms. 3-5) – oA3 = AUS**

**ACH Kind of regulation for auxiliary relay**: **Ht** = heating; **CL** = cooling

**SAA Set Point for auxiliary relay:** (-50,0÷110,0°C; -58÷230°F) it defines the room temperature set point to switch auxiliary relay.

**SHy Differential for auxiliary output:** (0,1 ÷ 25,5°C / 1÷255 °F) Intervention differential for auxiliary output set point.
**With ACH = cL** AUX Cut in is SAA + SHy; . AUX Cut out is SAA
**With ACH = Ht** AUX Cut in is SAA - SHy; . AUX Cut out is SAA

**ArP Probe selection for auxiliary**: **nP** = no probe, the auxiliary relay is switched only by button; **P1 =** Probe 1; **P2 =** Probe 2; **P3 =** Probe 3; **P4 =** NOT SET IT.

**Sdd Auxiliary relay off during defrost: n =** the auxiliary relay 3-5 operates during defrost.
**y =** the auxiliary relay 3-5 is switched off during defrost.

**ALARMS**

**ALP Probe selection for alarm**: nP = no probe, the temperature alarms are disabled; **P1 =** Probe 1; **P2 =** Probe 2; **P3 =** Probe 3; **P4 =** NOT SET IT.

**ALC Temperature alarms configuration:** (Ab; rE)
**Ab**= absolute temperature: alarm temperature is given by the ALL or ALU values. **rE** = temperature alarms are referred to the set point. Temperature alarm is enabled when the temperature exceeds the "SET+ALU" or "SET-ALL" values.

**ALU MAXIMUM temperature alarm**: (SET÷110°C; SET÷230°F) when this temperature is reached the alarm is enabled, after the "ALd" delay time.

**ALL Minimum temperature alarm**: (-50.0 ÷ SET °C; -58÷230°F when this temperature is reached the alarm is enabled, after the "ALd" delay time.

**AFH Differential for temperature alarm/ fan recovery:** (0,1÷25,5°C; 1÷45°F) Intervention differential for recovery of temperature alarm. It's also used for the restart of the fan when the FSt temperature is reached

**ALd Temperature alarm delay**: (0÷255 min) time interval between the detection of an alarm condition and alarm signalling.

**dAO Exclusion of temperature alarm at start-up**: (from 0.0 min to 23.5h) time interval between the detection of the temperature alarm condition after instrument power on and alarm signalling.

**CONDENSER TEMPERATURE ALARM**

**AP2 Probe selection for temperature alarm of condenser: nP** = no probe; **P1** =thermostat probe; **P2 =** evaporator probe; **P3** =configurable probe; **P4** = NOT SET IT.

**AL2 Low temperature alarm of condenser**: (-55÷150°C) when this temperature is reached the LA2 alarm is signalled, possibly after the Ad2 delay.

**Au2 High temperature alarm of condenser**: (-55÷150°C) when this temperature is reached the HA2 alarm is signalled, possibly after the Ad2 delay.

**AH2 Differential for temperature condenser alarm recovery**: (0,1÷25,5°C; 1÷45°F)

**Ad2 Condenser temperature alarm delay**: (0÷255 min) time interval between the detection of the condenser alarm condition and alarm signalling.

**dA2 Condenser temperature alarm exclusion at start up**: (from 0.0 min to 23.5h, res. 10min)

**bLL Compressor off with low temperature alarm of condenser**: **n = no:** compressor keeps on working**; Y = yes,** compressor is switched off till the alarm is present, in any case regulation restarts after AC time at minimum.

**AC2 Compressor off with high temperature alarm of condenser**: **n = no:** compressor keeps on working**; Y = yes,** compressor is switched off till the alarm is present, in any case regulation restarts after AC time at minimum.

**AUXILIARY RELAY**

**tbA Alarm relay silencing (with oA3 =ALr):**
**n**= silencing disabled: alarm relay stays on till alarm condition lasts,
**y** =silencing enabled: alarm relay is switched OFF by pressing a key during an alarm

**oA3 Fourth relay configuration (3-5): dEF, FAn:** do not select it!. **ALr**: alarm; **Lig**: light; **AuS**: Auxiliary relay; **onF**: always on with instrument on; **db=** neutral zone; **cP2 =** second compressor; **dF2:** do not select it!;. **HES:**. night blind.

**AoP Alarm relay polarity:** it set if the alarm relay is open or closed when an alarm happens. **CL**= terminals 1-4 closed during an alarm; **oP** = terminals 1-4 open during an alarm

**DIGITAL INPUTS**

**i1P Digital input 1 polarity (13-14): oP:** the digital input is activated by opening the contact; **CL:** the digital input is activated by closing the contact.

**i1F Digital input 1 configuration (13-14): EAL**= external alarm: "EA" message is displayed; **bAL**= serious alarm "CA" message is displayed. **PAL**= pressure switch alarm, "CA" message is displayed; **dor**= door switch function; **dEF**= activation of a defrost cycle; **AUS**=not enabled; **Htr**= kind of action inversion (cooling – heating); **FAn= not set it; ES**= Energy saving; **HdF** = Holiday defrost (enable only with RTC); **onF =** to switch the controller off.

**did** (0÷255 min) **with i1F= EAL or i1F = bAL digital input alarm delay (13-14):** delay between the detection of the external alarm condition and its signalling.
**with i1F= dor: door open signalling delay**
**with i1F= PAL: time for pressure switch function:** time interval to calculate the number of the pressure switch activation.

**i2P 2nd digital input polarity (13-19): oP:** the digital input is activated by opening the contact; **CL:** the digital input is activated by closing the contact.

**i2F 2nd digital input configuration (13-19): EAL**= external alarm: "EA" message is displayed; **bAL**= serious alarm "CA" message is displayed. **PAL**= pressure switch alarm, "CA" message is displayed; **dor**= door switch function; **dEF**= activation of a defrost cycle; **AUS**=not enabled; **Htr**= kind of action inversion (cooling – heating); **FAn= not set it; ES**= Energy saving; **HdF** = Holiday defrost (enable only with RTC); **onF =** to switch the controller off.

**d2d** (0÷255 min) **with i2F= EAL or i2F= bAL 2nd digital input alarm delay (13-19):** delay between the detection of the external alarm condition and its signalling.
**with i2F= dor: door open signalling delay**
**with i2F= PAL: time for pressure switch function:** time interval to calculate the number of the pressure switch activation.

**nPS Pressure switch number:** (0 ÷15) Number of activation of the pressure switch, during the "**did**" interval, before signalling the alarm event (I2F= PAL).
**If the nPS activation in the did time is reached, switch off and on the instrument to restart normal regulation.**

**odc Compressor and fan status when open door: no** = normal; **Fan** = Fan OFF; **CPr** = Compressor OFF; **F_C** = Compressor and fan OFF.

**rrd Outputs restart after doA alarm: no=** outputs not affected by the doA alarm; **yES =** outputs restart with the doA alarm.

**HES Temperature increase during the Energy Saving cycle:**
(-30,0°C÷30,0°C) it sets the increasing value of the set point during the Energy Saving cycle.

**TO SET CURRENT TIME AND WEEKLY HOLIDAYS (ONLY FOR MODELS WITH RTC)**

**Hur Current hour** (0 ÷ 23 h)

**Min Current minute** (0 ÷ 59min)

**dAY Current day** (Sun ÷ SAt)

**Hd1 First weekly holiday** (Sun ÷ nu) Set the first day of the week which follows the holiday times.

**Hd2 Second weekly holiday** (Sun ÷ nu) Set the second day of the week which follows the holiday times.

**N.B. Hd1,Hd2** can be set also as **"nu"** value (Not Used).

**TO SET ENERGY SAVING TIMES (ONLY FOR MODELS WITH RTC)**

**ILE Energy Saving cycle start during workdays**: (0 ÷ 23h 50 min.) During the Energy Saving cycle the set point is increased by the value in HES so that the operation set point is SET + HES.

**dLE Energy Saving cycle length during workdays**: (0 ÷ 24h 00 min.) Sets the duration of the Energy Saving cycle on workdays.

**ISE Energy Saving cycle start on holidays**. (0 ÷ 23h 50 min.)

**dSE Energy Saving cycle length on holidays** (0 ÷ 24h 00 min.)

**TO SET DEFROST TIMES (ONLY FOR MODELS WITH RTC)**

**Ld1÷Ld6 Workday defrost start** (0 ÷ 23h 50 min.) These parameters set the beginning of the 6 programmable defrost cycles during workdays. Ex. When **Ld2** = 12.4 the second defrost starts at 12.40 during workdays.

**Sd1÷Sd6 Holiday defrost start** (0 ÷ 23h 50 min.) These parameters set the beginning of the 6 programmable defrost cycles on holidays. Ex. When **Sd2** = 3.4 the second defrost starts at 3.40 on holidays.

**N.B. :<u>To disable a defrost cycle set it to "nu"(not used).</u> *Ex.*** *If **Ld6**=nu ; the sixth defrost cycle is disabled*

**OTHER**

**Adr Serial address** (1÷244): Identifies the instrument address when connected to a ModBUS compatible monitoring system.
**PbC Type of probe:** it allows to set the kind of probe used by the instrument: **PbC** = PBC probe, **ntc** = NTC probe.
**onF on/off key enabling: nu =** disabled; **oFF =** enabled; **ES = not set it**.
**dP1 Thermostat probe display**
**dP2 Evaporator probe display**
**dP3 Third probe display**- ***optional***.
**rSE Real set point:** it shows the set point used during the energy saving cycle or during the continuous cycle.
**rEL Software release** for internal use**.**
**Ptb Parameter table code:** readable only**.**

## 8. DIGITAL INPUT

The first digital input is enabled with P3P = n.
With P3P = n and i1F = i2F the second digital input is disabled
The free voltage digital inputs are programmable by the "**i1F**" and **i2F** parameters.

### 8.1 GENERIC ALARM (i1F or i2F = EAL)

As soon as the digital input is activated the unit will wait for "**did**" time delay before signalling the "**EAL**" alarm message. The outputs status don't change. The alarm stops just after the digital input is de-activated.

### 8.2 SERIOUS ALARM MODE (i1F or i2F = bAL)

When the digital input is activated, the unit will wait for "**did**" delay before signalling the "**CA**" alarm message. The relay outputs are switched OFF. The alarm will stop as soon as the digital input is de-activated.

### 8.3 PRESSURE SWITCH (i1F or i2F = PAL)

If during the interval time set by "**did**" parameter, the pressure switch has reached the number of activation of the "**nPS**" parameter, the "**CA**" pressure alarm message will be displayed. The compressor and the regulation are stopped. When the digital input is ON the compressor is always OFF. **If the nPS activation in the did time is reached, switch off and on the instrument to restart normal regulation.**

### 8.4 DOOR SWITCH INPUT (i1F or i2F = dor)

It signals the door status and the corresponding relay output status through the "**odc**" parameter: **no** = normal (any change); **Fan** = Fan OFF; **CPr** = Compressor OFF; **F_C** = Compressor and fan OFF.
Since the door is opened, after the delay time set through parameter "**did**", the door alarm is enabled, the display shows the message "**dA**" and **the regulation restarts is rtr = yES.** The alarm stops as soon as the external digital input is disabled again. With the door open, the high and low temperature alarms are disabled.

### 8.5 START DEFROST (i1F or i2F = dEF)

It starts a defrost if there are the right conditions. After the defrost is finished, the normal regulation will restart only if the digital input is disabled otherwise the instrument will wait until the "**MdF**" safety time is expired.

### 8.6 SWITCH THE AUXILIARY RELAY (i1F or i2F = AUS)

With oA3 = AUS the digital input switched the status of the auxiliary relay

### 8.7 ENERGY SAVING (i1F or i2F = ES)

The Energy Saving function allows to change the set point value as the result of the SET+ HES (parameter) sum. This function is enabled until the digital input is activated.

### 8.8 HOLIDAY DEFROST (i1F or i2F = HDF) –ONLY FOR MODELS WITH RTC

This function enabled the holiday defrost setting.

### 8.9 ON OFF FUNCTION (i1F or i2F = onF)

To switch the controller on and off.

### 8.10 DIGITAL INPUTS POLARITY

The digital input polarity depends on the "**i1P**" parameter.
**i1P or i2P =CL**: the input is activated by closing the contact.
**i1P or i2P=OP**: the input is activated by opening the contact

## 9. TTL SERIAL LINE – FOR MONITORING SYSTEMS

The TTL serial line, available through the HOT KEY connector, allows by means of the external TTL/RS485 converter, **XJ485-CX**, to connect the instrument to a monitoring system **ModBUS-RTU** compatible such as the X-WEB500/3000/300.

## 10. X-REP OUTPUT – OPTIONAL

As optional, an X-REP can be connected to the instrument, trough the HOY KEY connector. The X-REP output **EXCLUDES** the serial connection.

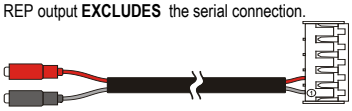

To connect the X-REP to the instrument the following connectors must be used CAB-51F(1m), CAB-52F(2m), CAB-55F(5m),

## 11. INSTALLATION AND MOUNTING

The controller shall be mounted on vertical panel, in a 150x31 mm hole, and fixed using two screws ∅ 3 x 2mm (only for XW60LR).
XW60LR: to obtain an IP65 protection grade use the front panel rubber gasket (mod. RG-L). The temperature range allowed for correct operation is 0 - 60 °C. Avoid places subject to strong vibrations, corrosive gases, excessive dirt or humidity. The same recommendations apply to probes. Let the air circulate by the cooling holes.

### 11.1 CUT OUT

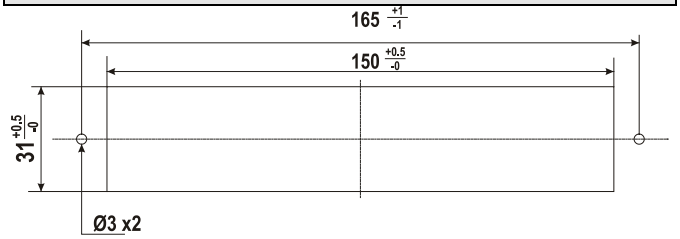


**XW60LRH**: the holes are not required

### 11.2 STEEL FINISHING MOUNTING

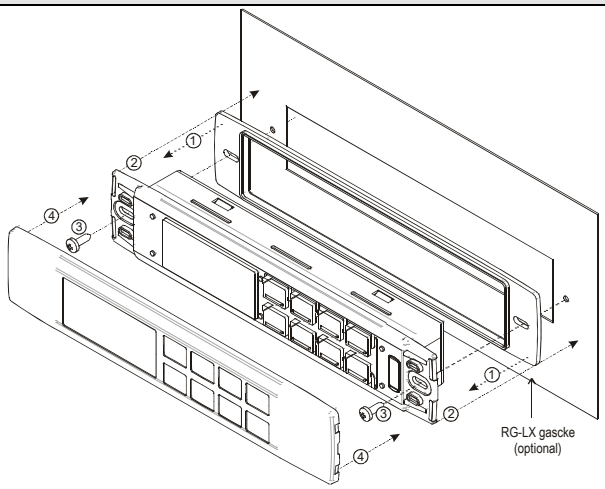


## 12. ELECTRICAL CONNECTIONS

The instruments are provided with screw terminal block to connect cables with a cross section up to 2,5 mm² for the digital and analogue inputs. Relays and power supply have a Faston connection (6,3mm). Heat-resistant cables have to be used. Before connecting cables make sure the power supply complies with the instrument's requirements. Separate the probe cables from the power supply cables, from the outputs and the power connections. Do not exceed the maximum current allowed on each relay, in case of heavier loads use a suitable external relay.
**N.B.** Maximum current allowed for all the loads is 20A.

### 12.1 PROBE CONNECTION

The probes shall be mounted with the bulb upwards to prevent damages due to casual liquid infiltration. It is recommended to place the thermostat probe away from air streams to correctly measure the average room temperature. Place the defrost termination probe among the evaporator fins in the coldest place, where most ice is formed, far from heaters or from the warmest place during defrost, to prevent premature defrost termination.

## 13. HOW TO USE THE HOT KEY

### 13.1 HOW TO PROGRAM A HOT KEY FROM THE INSTRUMENT (UPLOAD)

1. Program one controller with the front keypad.
2. When the controller is ON, insert the "**Hot key**" and push ▲ key; the **"uPL"** message appears followed a by flashing **"End"**
3. Push "**SET"** key and the **End** will stop flashing.
4. Turn OFF the instrument remove the **"Hot Key",** then turn it ON again.

**NOTE**: the "**Err**" message is displayed for failed programming. In this case push again ▲ key if you want to restart the upload again or remove the "**Hot key**" to abort the operation.

### 13.2 HOW TO PROGRAM AN INSTRUMENT USING A HOT KEY (DOWNLOAD)

1. Turn OFF the instrument.
2. Insert a **programmed "Hot Key" into the 5 PIN receptacle** and then turn the Controller ON.
3. Automatically the parameter list of the **"Hot Key"** is downloaded into the Controller memory, the "**doL**" message is blinking followed a by flashing **"End".**
4. After 10 seconds the instrument will restart working with the new parameters.
5. Remove the **"Hot Key"**..

**NOTE** the message "**Err**" is displayed for failed programming. In this case turn the unit off and then on if you want to restart the download again or remove the "**Hot key**" to abort the operation.

## 14. ALARM SIGNALS

| Message | Cause | Outputs |
|---|---|---|
| "P1" | Room probe failure | Compressor output acc. to par. "Con" and "COF" |
| "P2" | Second probe failure | Defrost end is timed |
| "P3" | Third probe failure | Outputs unchanged |
| "HA" | Maximum temperature alarm | Outputs unchanged. |
| "LA" | Minimum temperature alarm | Outputs unchanged. |
| "HA2" | Condenser high temperature | It depends on the "Ac2" parameter |
| "LA2" | Condenser low temperature | It depends on the "bLL" parameter |
| "dA" | Door open | Compressor and fans restarts |
| "EA" | External alarm | Output unchanged. |

| Message | Cause | Outputs |
|---|---|---|
| "CA" | Serious external alarm (i1F=bAL) | All outputs OFF. |
| "rtc" | Real time clock alarm | Alarm output ON; Other outputs unchanged; Defrosts according to par. "IdF" Set real time clock has to be set |
| rtF | Real time clock board failure | Alarm output ON; Other outputs unchanged; Defrosts according to par. "IdF" Contact the service |

## 14.1 ALARM RECOVERY

Probe alarms **P1**", "**P2**", "**P3**" start some seconds after the fault in the related probe; they automatically stop some seconds after the probe restarts normal operation. Check connections before replacing the probe.
Temperature alarms "**HA**", "**LA**" "**HA2**" and "**LA2**" automatically stop as soon as the temperature returns to normal values.
Alarms **"EA"** and **"CA"** (with i1F=bAL) recover as soon as the digital input is disabled.
Real time clock alarm **rtC,** it stops as soon as the correct hour and day are set.
Real time clock alarm **rtF**, the clock board has to be replaced. Contact the service.

## 14.2 OTHER MESSAGES

| | |
|---|---|
| **Pon** | Keyboard unlocked. |
| **PoF** | Keyboard locked |
| **noP** | **In programming mode**: none parameter is present in Pr1<br>**On the display** or in dP2, dP3, dP4: the selected probe is nor enabled |

## 15. TECHNICAL DATA

**Housing:** self extinguishing ABS.
**Case:** facia 38x185 mm; depth 40mm
**Mounting :** panel mounting in a 150x31 mm panel cut-out with
**Only for XW60LR:** two screws. ∅3x2mm, distance between holes 165mm
**Protection:** IP20;
**Frontal protection:** IP65 **Only for XW60LR** with frontal gasket mod RG-L or RG-LX.
**Connections:** Screw terminal block ≤1 mm² heat-resistant wiring for very low voltage, Screw terminal block ≤ 2,5 mm² heat-resistant wiring for low voltage (110 or 230Vac).
**Power supply:** 230Vac or. 110Vac ± 10%, 50/60Hz.
**Power absorption:** 7VA max.
**Display**: 3 digits, red LED, 14,2 mm high.
**Inputs**: Up to 4 NTC or PTC probes.
**Digital inputs**: free of voltage
**Relay outputs:** ***Total current on loads MAX. 20A***
**compressor:** relay SPST 20(8) A, 250Vac
**light:** relay SPST 5A, 250Vac
**fans:** relay SPST 5 A, 250Vac
**defrost:** relay SPST 8(3) A, 250Vac
**Other output :** buzzer (optional)
**Serial output :** TTL as alternate to X-REP output
**X-REP output :** optional as alternate to TTL serial output
**Communication protocol:** Modbus - RTU
**Data storing**: on the non-volatile memory (EEPROM).
**Internal clock back-up:** 24 hours (only for model with RTC)
**Kind of action:** 1B; **Pollution grade:** normal; **Software class:** A.;
**Over voltage Category**: II
**Operating temperature:** 0÷60 °C; **Storage temperature:** -30÷85 °C.
**Relative humidity:** 20÷85% (no condensing)
**Measuring and regulation range: NTC probe:** -40÷110°C (-40÷230°F);
**PTC probe:** -50÷150°C (-58÷302°F)
**Resolution:** 0,1 °C or 1 °F (selectable); **Accuracy (ambient temp. 25°C)**: ±0,7 °C ±1 digit

## 16. CONNECTIONS

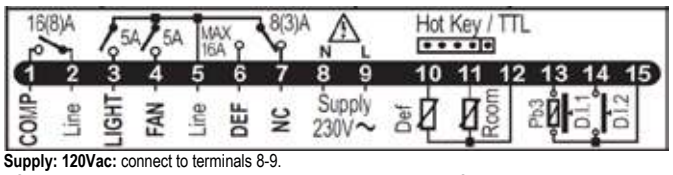


**Supply: 120Vac:** connect to terminals 8-9.
**NOTE: on models with X-REP option, connect the X-REP to the HOT KEY receptacle**

## 17. DEFAULT SETTING VALUES

| Label | Name | Range | °C/°F | Level |
|---|---|---|---|---|
| **Set** | Set point | LS - US | -5.0 | - - - |
| **rtc*** | Real time clock menu | | - | Pr1 |
| **Hy** | Differential | (0,1°C ÷ 25,5°C) | 2.0 | Pr1 |
| **LS** | Minimum set point | (-55,0°C ÷ SET) | -50.0 | Pr2 |
| **US** | Maximum set point | (SET ÷ 150,0°C) | 110 | Pr2 |
| **Ot** | P1 probe calibration | (-12,0°C ÷ 12,0°C) | 0.0 | Pr1 |
| **P2P** | P2 probe presence | n - Y | Y | Pr1 |
| **OE** | P2 probe calibration | (-12,0°C ÷ 12,0°C) | 0.0 | Pr2 |
| **P3P** | P3 probe presence | n - Y | n | Pr2 |
| **O3** | P3 probe calibration | (-12,0°C ÷ 12,0°C) | 0 | Pr2 |
| **OdS** | Outputs delay at start up | 0 ÷ 255 (min.) | 0 | Pr2 |
| **AC** | Anti-short cycle delay | 0 ÷ 50 (min.) | 1 | Pr1 |
| **AC1** | Second compressor start delay | 0 ÷ 255 (sec.) | 5 | Pr2 |
| **rtr** | P1-P2 percentage for regulation | 0 ÷ 100 (100=P1 , 0=P2) | 100 | Pr2 |
| **CCt** | Continuous cycle duration | 0 ÷ 24H0(144) | 0.0 | Pr2 |
| **CCS** | Set point for continuous cycle | (-55.0°C ÷ 150,0°C) | -5 | Pr2 |
| **COn** | Compressor ON time with faulty probe | 0 ÷ 255 (min.) | 15 | Pr2 |
| **COF** | Compressor OFF time with faulty probe | 0 ÷ 255 (min.) | 30 | Pr2 |
| **CF** | Temperature measurement unit | °C - °F | °C | Pr2 |
| **rES** | Resolution | dE – in | dE | Pr1 |
| **Lod** | Probe displayed | P1 - P2 - P3 - P4 - SEt – dtr | P1 | Pr2 |
| **rEd²** | X-REP display | P1 - P2 - P3 - P4 - SEt – dtr | P1 | Pr2 |
| **dLy** | Display temperature delay | 0 ÷ 20.0min (ris. 10 sec.) | 0.0 | Pr2 |
| **dtr** | P1-P2 percentage for display | 1 ÷ 99 | 50 | Pr2 |
| **EdF*** | Kind of interval for defrost | rtc÷in | in | Pr2 |
| **tdF** | Defrost type | EL – in | EL | Pr1 |
| **dFP** | Probe selection for defrost termination | nP - P1 - P2 – P3 - P4 | P2 | Pr2 |
| **dtE** | Defrost termination temperature | (-55.0°C ÷ 50.0°C) | 8.0 | Pr1 |
| **IdF** | Interval between defrost cycles | 0 ÷ 120 (ore) | 6 | Pr1 |
| **MdF** | (Maximum) length for defrost | 0 ÷ 255 (min.) | 30 | Pr1 |
| **dSd** | Start defrost delay | 0 ÷ 255 (min.) | 0 | Pr2 |
| **dFd** | Displaying during defrost | rt - it - SEt – dEF | it | Pr2 |
| **dAd** | MAX display delay after defrost | 0 ÷ 255 (min.) | 30 | Pr2 |
| **Fdt** | Draining time | 0 ÷ 255 (min.) | 0 | Pr2 |
| **dPo** | First defrost after start-up | n – Y | n | Pr2 |
| **dAF** | Defrost delay after fast freezing | 0 ÷ 24.0h; ris. 10min | 0.0 | Pr2 |
| **Fnc** | Fan operating mode | C_n - O_n - C_Y – O_Y | o-n | Pr1 |
| **Fnd** | Fan delay after defrost | 0 ÷ 255 (min.) | 10 | Pr1 |
| **Fct** | Differential of temperature for forced activation of fans | (0°C ÷ 50°C) | 10 | Pr2 |
| **FSt** | Fan stop temperature | (-55.0°C ÷ 50.0°C) | 2 | Pr1 |
| **Fon** | Fan on time with compressor off | 0÷15 (min.) | 0 | Pr2 |
| **FoF** | Fan off time with compressor off | 0÷15 (min.) | 0 | Pr2 |
| **FAP** | Probe selection for fan management | nP - P1 - P2 - P3 – P4 | P2 | Pr2 |
| **ACH** | Kind of action for auxiliary relay | CL – Ht | cL | Pr2 |
| **SAA** | Set Point for auxiliary relay | (-55.0°C ÷ 150,0°C) | 0,0 | Pr2 |
| **SHy** | Differential for auxiliary relay | (0,1°C ÷ 25,5°C) | 2,0 | Pr2 |
| **ArP** | Probe selection for auxiliary relay | nP - P1 - P2 - P3 – P4 | nP | Pr2 |
| **Sdd** | Auxiliary relay operating during defrost | n – Y | n | Pr2 |
| **ALP** | Alarm probe selection | nP - P1 - P2 - P3 – P4 | P1 | Pr2 |
| **ALc** | Temperat. alarms configuration | rE – Ab | Ab | Pr2 |
| **ALU** | MAXIMUM temperature alarm | ALc=rE: 0.0÷ 50.0°C<br>ALc=Ab: ALL÷150°C | 110,0 | Pr1 |
| **ALL** | Minimum temperature alarm | ALc = rE: 0.0÷50.0°C; ALc=Ab: -55°C÷ALU | -50,0 | Pr1 |
| **AFH** | Differential for temperat. alarm recovery | (0,1°C ÷ 25,5°C) | 2,0 | Pr2 |
| **ALd** | Temperature alarm delay | 0 ÷ 255 (min.) | 15 | Pr2 |
| **dAO** | Delay of temperature alarm at start up | 0 ÷ 24.0 h ris. 10min | 1,3 | Pr2 |
| **AP2** | Probe for temperat. alarm of condenser | nP - P1 - P2 - P3 – P4 | P4 | Pr2 |
| **AL2** | Condenser for low temperat. alarm | (-55.0°C ÷ 150,0°C) | -40 | Pr2 |
| **AU2** | Condenser for high temperat. alarm | (-55.0°C ÷ 150,0°C) | 110 | Pr2 |
| **AH2** | Differ. for condenser temp. alar. recovery | (0,1°C ÷ 25,5°C) | 5 | Pr2 |
| **Ad2** | Condenser temperature alarm delay | 0 ÷ 255 (min.) | 15 | Pr2 |
| **dA2** | Delay of cond. temper. alarm at start up | 0 ÷ 24H0(144) | 1,3 | Pr2 |
| **bLL** | Compr. off for condenser low temperature alarm | n – Y | n | Pr2 |
| **AC2** | Compr. off for condenser high temperature alarm | n – Y | n | Pr2 |
| **tbA** | Alarm relay disabling | n – Y | y | Pr2 |
| **oA3** | Third relay configuration | dEF - FAn - ALr - LiG - AUS - OnF - db - CP2 - dF2 – HES | Lig | Pr2 |
| **AoP** | Alarm relay polarity | OP – CL | cL | Pr2 |
| **i1P** | Digital input polarity | OP – CL | cL | Pr1 |
| **i1F** | Digital input 1 configuration | EAL - bAL - PAL - dor - dEF - AUS - Htr - FAn - ES-HdF – onF | dor | Pr1 |
| **did** | Digital input alarm delay | 0 ÷ 255 (min.) | 15 | Pr1 |
| **i2P** | Digital input 2 polarity | OP – CL | cL | Pr2 |
| **i2F** | Digital input 2 configuration | EAL - bAL - PAL - dor - dEF - AUS - Htr - FAn - ES-HdF – onF | EAL | Pr2 |
| **d2d** | Digital input alarm delay | 0 ÷ 255 (min.) | 5 | Pr2 |
| **nPS** | Number of activation of pressure switch | 0 ÷ 15 | 15 | Pr2 |
| **odc** | Compress and fan status when open door | no - FAn - CPr - F-C | F-c | Pr2 |
| **rrd** | Regulation restart with door open alarm | n - Y | y | Pr2 |
| **HES** | Differential for Energy Saving | (-30°C ÷ 30°C) | 0 | Pr2 |
| **Hur*** | Current hour | Read only | - | Pr1 |
| **Min*** | Current minute | Read only | - | Pr1 |
| **dAY*** | Current day | Read only | - | Pr1 |
| **Hd1*** | First weekly holiday | Sun ÷ SAt – nu | nu | Pr1 |
| **Hd2*** | Second weekly holiday | Sun ÷ SAt – nu | nu | Pr1 |
| **ILE*** | Energy Saving cycle start during workdays | 0 ÷ 23h5 | 0.0 | Pr1 |
| **dLE*** | Energy Saving cycle length during workdays | 0 ÷ 24h0 | 0 | Pr1 |
| **ISE*** | Energy Saving cycle start on holidays | 0 ÷ 23h5 | 0.0 | Pr1 |
| **dSE*** | Energy Saving cycle length on holidays | 0 ÷ 24h0 | 0 | Pr1 |
| **Ld1*** | 1st workdays defrost start | 0 ÷ 23H5;- nu | nu | Pr1 |
| **Ld2*** | 2nd workdays defrost start | 0 ÷ 23H5;- nu | nu | Pr1 |
| **Ld3*** | 3rd workdays defrost start | 0 ÷ 23H5;- nu | nu | Pr1 |
| **Ld4*** | 4th workdays defrost start | 0 ÷ 23H5;- nu | nu | Pr1 |
| **Ld5*** | 5th workdays defrost start | 0 ÷ 23H5;- nu | nu | Pr1 |
| **Ld6*** | 6th workdays defrost start | 0 ÷ 23H5;- nu | nu | Pr1 |
| **Sd1*** | 1st holiday defrost start | 0 ÷ 23H5;- nu | nu | Pr1 |
| **Sd2*** | 2nd holiday defrost start | 0 ÷ 23H5;- nu | nu | Pr1 |
| **Sd3*** | 3rd holiday defrost start | 0 ÷ 23H5;- nu | nu | Pr1 |
| **Sd4*** | 4th holiday defrost start | 0 ÷ 23H5;- nu | nu | Pr1 |

| Label | Name | Range | °C/°F | Level |
|---|---|---|---|---|
| **Sd5*** | 5th holiday defrost start | 0 ÷ 23H5;- nu | nu | Pr1 |
| **Sd6*** | 6th holiday defrost start | 0 ÷ 23H5;- nu | nu | Pr1 |
| **Adr** | Serial address | 1 ÷ 247 | 1 | Pr2 |
| **PbC** | Kind of probe | PtC - ntC | ntc | Pr2 |
| **onF** | on/off key enabling | nu - OFF – ES | oFF | Pr2 |
| **dP1** | Room probe display | Probe value | - | Pr2 |
| **dP2** | Evaporator probe display | Probe value | - | Pr2 |
| **dP3** | Third probe display | Probe value | - | Pr2 |
| **rSE** | Real set | Read only | - | Pr2 |
| **rEL** | Software release | Read only | 1.8 | Pr2 |
| **Ptb** | Map code | Read only | | Pr2 |

**2 Only for model with X-REP output**
*** Only for model with real time clock**

Dixell EMERSON Climate Technologies
Dixell S.r.l. - Z.I. Via dell'Industria, 27 - 32010 Pieve d'Alpago (BL) ITALY
Tel. +39.0437.9833 r.a. - Fax +39.0437.989313 - EmersonClimate.com/Dixell - dixell@emerson.com