FIJI

ISA S.p.A.
Via Madonna di Campagna 123 - 06083 Bastia Umbra PG - Italy
T. +39 075 801 71 - F. +39 075 800 09 00 - E. customerservice@isaitaly.com
www.isaitaly.com

1.	**NOTES / WARNINGS**	**4**
2.	**MANUFACTURER**	**10**
3.	**WARRANTY TERMS AND CONDITIONS**	**10**
4.	**EQUIPMENT IDENTIFICATION**	**10**
5.	**USE**	**11**
5.1	COMPOSITION	11
6.	**SAFETY**	**12**
6.1	SAFETY DEVICES PRESENT	12
6.2	FIXED GUARDS	12
6.3	ISOLATING THE ELECTRIC POWER SUPPLY	12
6.4	RESIDUAL RISKS	12
6.5	RISK OF CONTACT WITH LIVE PARTS	12
6.6	FIRE	12
6.7	EXPLOSIVE ATMOSPHERE	13
6.8	SLIPPING	13
6.9	TRIPPING	13
6.10	CIRCUIT FAULTS	13
6.11	WARNING SIGNS (IF ANY)	13
6.12	FALLING OBJECTS	13
6.13	COOLING	13
6.14	FOOD SAFETY (PACKAGED PRODUCTS)	13
7.	**DISPOSAL OF WASTE MATERIAL**	**14**
8.	**INSTALLATION**	**15**
8.1	STORAGE AND UNPACKING	15
8.2	ENVIRONMENTAL CONDITIONS	15
8.3	ELECTRICAL CONNECTION	15
8.4	WALL MOUNTING	16
8.5	POSITIONING / MOVING	16
9.	**MAINTENANCE**	**17**
10.	**FAULTS - TECHNICAL AFTER-SALES ASSISTANCE**	**18**
10.1	ALARMS LIST (WHERE PRESENT)	19
11.	**TECHNICAL SPECIFICATIONS**	**20**
11.1	LIGHTING	21
11.2	WEIGHTS	21
11.3	OPENING / CLOSING (OPERATOR SIDE)	21
12.	**CONTROL PANEL**	**22**
12.1	USER INTERFACE EW974	23
13.	**CLEANING**	**24**
13.1	INTERNAL	24
13.2	CONDENSING UNIT	25
13.3	DEFROST WATER COLLECTION TRAY (IF PRESENT)	25
14.	**PROLONGED APPLIANCE SWITCH-OFF**	**26**

ATTACHMENTS

1	**WIRING DIAGRAM** - 412100264000	27
2	**WIRING DIAGRAM** - 412100411000	28
3	**WIRING DIAGRAM** - 412100756000	29

The manual contains symbols to attract the reader's attention and highlight particularly important aspects. The table below illustrates the meaning of the various symbols used.

	Read the manual		Use of protective clothing
	DANGER Live electrical parts		Maintenance requirement or operations that must be completed by qualified personnel or technical assistance centre
	ATTENTION / DANGER		Important information
	Information		Operations that must be performed by two persons
	Eye check		Notes/Important Notes
	DANGER Slipping		Waste disposal
	DANGER Tripping		Recyclable Material
	Earthing		

1. NOTES / WARNINGS

NOTE
The content of this manual is of a technical nature and is owned by **ISA**. It is forbidden to reproduce, circulate or modify all or part of its content without written consent. Any infringement will be legally pursued.

The manual and the conformity certificate are an integral part of the equipment and should always accompany the product in the event of a transfer to a new location or to a new owner. The user is responsible for the integrity of these documents, for their consultation and during the whole life cycle of the equipment itself. Keep this manual in a safe place.It should be available for consultation near the equipment at all times. If lost or destroyed, you can request a copy of the manual from **ISA** by specifying the exact model, serial number and year of manufacture. The manual reflects the manufacturing technology at the time of supply.The manufacturer reserves the right to modify its products in any way it deems necessary, with no obligation to update manuals and machines relating to previous manufacturing batches.

The equipment can be used by children no younger than 8 and by persons with reduced physical, sensory or mental capabilities, or lacking experience or necessary knowledge, as long as supervised or after having received training regarding safe use of the equipment and have an understanding of the inherent risks involved. Do not allow children to play with the device. The cleaning and maintenance that the user will carry out must not be undertaken by children without supervision.

Always refer to this manual before going ahead with any operation. Before doing any type of work, disconnect the equipment from the power supply. Any work on electric and electronic parts or cooling system components should only be carried out by trained personnel in compliance with current laws.

The Manufacturer cannot be held liable for any damage to persons, animals or to the product in the following cases:

- Improper use of the equipment or use of the appliance by unqualified or unauthorised personnel.
- Failure to comply with current legislation.
- Incorrect installation and/or power supply faults.
- Failure to observe the instructions contained in this Manual.
- Failure to follow the maintenance programme.
- Unauthorised modifications.
- Installation of non-original spare parts in the equipment.
- Installation and use of the equipment for purposes other than those for which the appliance was designed and sold.
- Tampering with or damage to the power supply cable.

1. NOTES / WARNINGS

Liability for applying the safety instructions contained in this manual is held by the technical personnel responsible for the intended use of the equipment, who should ensure that authorised personnel:

- Are qualified to carry out the requested activity;
- is aware of and carefully complies with the instructions contained in this document
- are aware of, and apply, the general safety standards applicable to the equipment.

The buyer is responsible for training personnel using the appliance on the risks, safety devices and general health and safety rules required by the laws of the country where the appliance is installed.Users/operators should be aware of the position of all the controls and how they work, as well as of the features of the appliance.
They should also read this manual in its entirely. Maintenance work should be conducted by qualified personnel after the appliance has been prepared adequately.

DANGER
Unauthorised tampering with or replacement of one or more parts of the appliance, use of accessories that modify the use of the same and use of spare parts different to those recommended, can become the cause of injury.

DANGER
Any work conducted on the on the appliance **must** involve disconnection from the power socket and in any case, none of the protective elements (grid, casing) should be removed by non-qualified staff.The appliance should not be operated when these protective elements have been removed.

NOTE
In order not to compromise functionality and safety of the appliance, the particularly complex installation and maintenance activities are not documented in this manual and are performed by the undersigned company.

Never use electric devices inside this appliance. Do not use mechanical devices or other means to accelerate the defrosting process, other than those recommended by the manufacturer. Keep the air vents in the casing of the appliance or in the structure built into the wall free of obstructions. Do not damage the refrigeration circuit.

RISK OF EXPLOSION

Do not store products containing flammable propellants or explosives.

1. NOTES / WARNINGS

STAFF TRAINING

The buyer is responsible for ensuring personnel who will use the appliance and maintenance technical staff are instructed and trained adequately. The manufacturer is available for advice, clarifications, etc. so that the operator and technical staff can use the appliance correctly. To ensure operator safety, appliance devices should be kept in constant working order. This manual is intended to illustrate the use and maintenance of the appliance.The operator has a responsibility and duty to carefully observe the instructions contained within it.

Failure to comply with safety standards may result in injury to personnel and damage to the equipment components and control unit.
The user can contact the dealer to request additional information not contained in this document, or suggest improvements, at any time.

Before the product is delivered to the customer, it is essential that a **trained technical member of staff** checks that the appliance is operating correctly in order to achieve maximum performance.

INTRODUCTION

ISA employs materials of the best quality and as they enter the company, we constantly monitor their storage and the use as part of the manufacturing process to prevent damage, deterioration and failure. All manufacturing elements has been designed and manufactured in order to guarantee reliability and high safety standards. All appliances are subjected to a strict testing procedure before delivery.However, please bear in mind that product performance over time depends on correct use and adequate maintenance. This manual contains the necessary instructions to maintain the appliance's initial appearance and functions over time.

The use and maintenance manual contains the information required to understand the operating modes of the appliance and for its correct use, in particular: the technical description of the various functional groups, accessories and safety systems, operation, use of instrumentation and interpretation of any diagnostic warnings, main procedures and information relating to the ordinary maintenance operations. For correct use of the appliance, the working environment should comply with current health and safety standards.

The safety requirements, indications, standards and notes illustrated in the various chapters of the manual are aimed at establishing a code of conduct and a series of obligations to be observed when performing the various activities, in order to create safe conditions for personnel, the equipment and the surrounding environment.

1. NOTES / WARNINGS

The safety standards reported in this document are intended for trained, authorised personnel responsible for:

- Transport
- Installation
- Operation
- Management
- Maintenance
- Cleaning
- Putting out of order
- Disposal

ATTENTION
Reading this manual, albeit in full, is no substitute for adequate user experience. therefore it should only be considered a useful reminder of the technical features and the main operations to perform.

WARNING
Installers and users must read
and understand all instructions herein before
carrying out any operation on the equipment.

1. NOTES / WARNINGS

R744 - REFRIGERANT (WHERE APPLICABLE)

R744 The refrigerant **R744** is a gas that is compatible with the environment. Pay close attention during transport, installation and that the destruction not to damage the refrigerant pipelines.

IN THE EVENT OF DAMAGE:
Keep flames or sources of ignition away from the appliance. Properly ventilate the premises for a few minutes. Turn the unit off, pull the plug. Notify the customer service department.

ATTENTION
The refrigerant system is **High Pressure**.

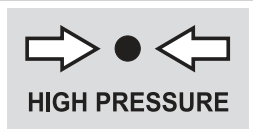

Do not tamper with the system, but call a specialised and qualified technician before disassembly.

ATTENTION
Maintenance must be performed by qualified personnel that has been to work with flammable refrigerants.

R290 - REFRIGERANT (WHERE APPLICABLE)

The refrigerant **R290** is a gas that is compatible with the environment, **but is highly flammable**. Pay close attention during transport, installation and dismantling not to damage the refrigerant pipelines.

IN THE EVENT OF DAMAGE:
Keep flames or sources of ignition away from the appliance. Properly ventilate the premises for a few minutes. Turn the unit off, pull the plug. Notify the customer service department. The more refrigerant containing an appliance, the greater must be the environment in which there is the unit. In areas too small, in the event of leakage can form a flammable mixture of air and gas. **The volume of the room where the appliance is installed must be at least 19 m³ for each cooling system present in the room**.

ATTENTION
Maintenance must be performed by qualified technical personnel with appropriate training and authorisation to work with inflammable refrigerants.

1. NOTES / WARNINGS

R600a - REFRIGERANT (WHERE APPLICABLE)

The refrigerant **R600a** is a gas that is compatible with the environment, but **highly flammable**. Pay close attention during transport, installation and dismantling not to damage the refrigerant pipelines.

IN THE EVENT OF DAMAGE:
Keep flames or sources of ignition away from the appliance. Properly ventilate the premises for a few minutes. Turn the unit off, pull the plug. Notify the customer service department. The more refrigerant containing an appliance, the greater must be the environment in which there is the unit. In areas too small, in the event of leakage can form a flammable mixture of air and gas. **The volume of the room where the appliance is installed must be at least 17 m³ for each cooling system present in the room**.

ATTENTION
Maintenance must be performed by qualified technical personnel with appropriate training and authorisation to work with inflammable refrigerants.

2. MANUFACTURER

ISA S.p.A.

Via Madonna di Campagna 123
06083 Bastia Umbra PG
Italy

T. +39 075 801 71
F. +39 075 800 09 00
E. customerservice@isaitaly.com

www.isaitaly.com

3. WARRANTY TERMS AND CONDITIONS

The seller's warranty on the equipment is valid for **12** (TWELVE) **months from the date of delivery**.
The warranty includes repairs or replacements of any faulty parts due to manufacturing processes or installation after written communication has been received, stating the appliance serial number and date of installation.
Not included in the warranty:

- Incorrect use of the appliance
- Incorrect connection to the power grid
- Normal component wear (e.g. compressor failure, neon/LED lights, etc.) where not caused by manufacturing defects.
- Installation, technical instruction, regulation and condenser cleaning call-outs.

If the seller's technical staff detect any tampering, unauthorised repairs or inappropriate use of appliance the warranty will be invalidated.
Shipment of components covered by the warranty is freight collect only.
Any damage to the appliance detected at the time of delivery due to transport must be reported on the same shipping note to claim compensation from the carrier.
The seller cannot be held liable in the event of damage to accepted products due to appliance faults.

4. EQUIPMENT IDENTIFICATION

- Find the label affixed to the machine in order to read technical data.
- Check the machine model and the power supply voltage before you perform any operation.
- If you find discrepancies, contact the manufacturer or the company that supplied the machine immediately.

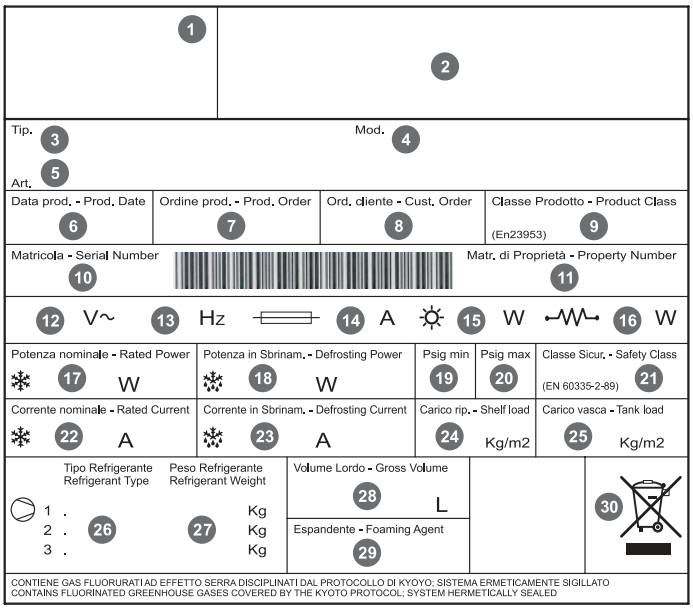

1	IDENTIFICATION OF THE COMPANY RESPONSIBLE FOR THE PRODUCT
2	SYMBOLS OF COMPLIANCE
3	TYPE
4	MODEL NAME
5	ARTICLE
6	PRODUCTION DATE
7	PRODUCTION ORDER
8	CUSTOMER ORDER
9	PRODUCT CLASS
10	SERIAL NO.
11	OWNER REGISTRATION NUMBER
12	SUPPLY VOLTAGE
13	SUPPLY VOLTAGE
14	FUSE VALUE
15	LAMP POWER
16	ELECTRICAL RESISTANCE ABSORPTION
17	NOMINAL POWER (NORMAL OPERATION)
18	POWER (DEFROSTING)
19	MINIMUM PRESSURE
20	MAXIMUM PRESSURE
21	SAFETY CLASS
22	NOMINAL CURRENT
23	CURRENT DURING DEFROSTING
24	SHELF LOAD
25	TANK LOAD
26	TYPE OF COOLANT
27	WEIGHT OF COOLANT
28	GROSS VOLUME
29	EXPANDING ISOLATION AGENT
30	WEEE MARK

5. USE

This appliance is exclusively intended to:

DISPLAYING AND SALE OF SPREADABLE ICE CREAM

The manufacturer is not liable for injury to persons or damage to property or the appliance itself caused by the displaying of products other than those described above.

THE APPLIANCE IS INTENDED FOR PROFESSIONAL USE.

Not suitable for:

- Food preservation.
- Displaying and/or preserving of non-food products (chemicals, pharmaceuticals, etc.).

ATTENTION

LOAD LIMITS

It is fundamental **not to exceed the load limits indicated** in order not to alter the correct air circulation and thus prevent a higher product temperature. The limits indicated refer to a static and evenly distributed load. Therefore dynamic overloads due to violent loading operations are excluded, which must be prevented for safety reasons.

5.1 COMPOSITION

The appliance is made up from a unique cabinet, onto which all devices necessary to make it a professional and efficient product for its declared use, are installed.

The appliance is composed of:

Ventilated refrigeration unit
Condenser unit on board
Electrical system
Electronic command panel
Insulated monolithic structure in ecological polyurethane
Internal LED lighting
Operator side closure with flap
Swivel casters with brakes

6. SAFETY

The appliance is equipped with safety devices. The buyer is responsible for training personnel using the appliance on the risks, safety devices and general health and safety rules required by the laws of the country where the appliance is installed. Users/operators should be aware of the position of all the controls and how they work, as well as of the features of the appliance. They must also have read this manual in its entirety.

6.1 SAFETY DEVICES PRESENT

Devices whose operation prevents the occurrence of risk situations in operating conditions (e.g. fuses, pressure switches, protections, magnet circuit breakers, etc.).

6.2 FIXED PROTECTIONS

Fixed protective devices consist of fixed perimeter shields, which are used to prevent external parts from entering the equipment.

DANGER
The appliance must not be restarted following maintenance until all protective panels have been replaced.

VISUAL OBSERVATION
You should check the integrity of fixed panels and corresponding fixings to the frame, focussing in particular on the protective panels.

6.3 ISOLATING THE ELECTRIC POWER SUPPLY

Before conducting any maintenance work on the equipment or part of it, it is necessary to section the power supply that powers it.

DANGER
In the event of maintenance operations in which the operator cannot prevent accidental closure of the circuit by others, disconnect the appliance from the mains electricity entirely.

6.4 RESIDUAL RISKS

During design the manufacturer examined all the areas or parts at risk.Therefore, all necessary precautions have been taken to prevent risks to persons and damage to the appliance.

ATTENTION
- Periodically check that all safety devices are operating correctly.
- Do not remove the fixed guards.
- Do not introduce unauthorised objects or tools into the work area.

Although the appliance is fitted with the safety devices prepared, there are still some risks that cannot be eliminated, but reduced via corrective action by the final integrator and correct operational procedures.
Below is a summary of the remaining risks associated with the appliance during:

- Normal operation
- Adjustments and fine tuning
- Maintenance
- Cleaning

6.5 RISKS OF CONTACT WITH LIVE PARTS

Risk of breaking or damaging the electrical components of the appliance, with a possible reduction in safety levels following a short circuit.
Before connecting the electricity supply, make sure there is no ongoing maintenance work.

ATTENTION
Before making the connection, check that the d.c. current in the installation point does not exceed that indicated on the protections switches present in the electric control board.If this is not the case, the user must envision the relevant limiting devices. It is strictly forbidden to conduct any electrical modification, in order to prevent additional unforeseen hazards and risks.

6.6 FIRE

DANGER
In the event of a fire, immediately disconnect the master switch from the main power supply line.

6.7 EXPLOSIVE ATMOSPHERE

The equipment must not be located in an area classified as an explosion risk as per 199/92/EC such as:

Zone 0
An area in which there is a permanent, long-lasting or frequently explosive atmosphere made up of a mixture of air and flammable substances in the form of gases, fumes or steam.
Zone 1
An area in which the formation of an explosive atmosphere, made up of a mixture of air and flammable substances in the form of gases, fumes or steam is occasionally probable during normal activities.
Zone 20
An area in which there is a permanent, long-lasting or frequently explosive atmosphere in the form of clouds of combustible dust in the air.
Zone 21
An area in which the formation of an explosive atmosphere in the form of clouds of combustible dust is occasionally probable during normal activities.

6.8 SLIPPING

DANGER
Any leaks in the areas surrounding the appliance may cause personnel to slip. Check that there are no leaks and keep these areas clean at all times.

6.9 TRIPPING

DANGER
Generally untidy deposits of material may constitute a trip hazard and a total or partial obstruction of emergency exit routes. You should ensure that operating and transit areas and escape routes are free from obstacles in compliance with current law.

6.10 CIRCUIT FAULTS

Owing to potential faults, safety circuits may become less effective, which results in lower safety levels. You should check the operational condition of the appliance devices regularly.

6.11 WARNING SIGNS (IF ANY)

The appliance is fitted with warning danger, warning and obligation signs defined in agreement with the Standard relative to the graphical signs to be used on equipment. These signs are located where they are clearly visible.

ATTENTION
Any warning plates on the appliance must not be removed.
The user is responsible for replacing warning signs that, owing to wear, become unreadable.

6.12 FALLING OBJECTS

The positioning of the cabinet display parts (where present) of the equipment (i.e. counters, rods and hooks, etc.), as well as the arrangement of the products inside the cabinet can be the source of potential hazards if not properly performed. Follow the positioning instructions described in this Manual before you place products inside the cabinet, check that the counters are properly fastened, as also the hooks, etc. Do not exceed the maximum load limit. Do not exceed the maximum load limit. Do not position tilted product on the counters if they are not held in place by their stoppers.

6.13 COOLING

During different operations to perform on the counter, such as cleaning or loading goods, it is necessary to handle products and/or counter parts at a low temperature with the risk of "cold injury" for the operators and/or accidental slipping hazard. Follow the safety regulations in the place where the cabinet is installed; more specifically, be sure to always use correct PPE (especially gloves).

6.14 FOODSTUFFS SAFETY (PACKAGED PRODUCTS)

During displaying of packaged products there must be no direct contact between the food products and the display surfaces, however in the event of accidental breakage of the packaging of a product for a sufficiently prolonged period, contamination of the product itself may occur; in this case, strictly follow the instructions for use of the appliance (remove the packaging damaged by exposure and clean using specific products).

7. DISPOSAL OF WASTE MATERIAL

During normal operation, the appliance does not generate any environmental contamination. At the end of its life cycle, or if it is necessary to carry out permanent decommissioning, we recommend the following procedures:

DISPOSAL (USER)

The symbol, applied to either the product or its packaging, indicates that the product should not be considered as normal domestic waste, but should be taken to a waste collection point for the recycling of electrical and electronic appliances. The correct disposal of this product contributes to preventing potential negative consequences that might derive from an inadequate disposal of the product. For detailed information about recycling this product, contact your council, your local waste collection service or the store where you purchased the product.

PROCEDURE FOR DISPOSAL and RECYCLING AT THE END OF APPLIANCE LIFE SPAN OF THE EQUIPMENT (AUTHORISED BODIES)

- Switch off the equipment and unplug the power supply cable.
- Remove the lamps (if installed).These should be disposed of separately.
- Remove the power units and the electronic cards.These should be disposed of separately.
- Remove all the independent parts (grids, casings, profiles, etc.) and group them according to shared features in order to access the heat exchangers, pipes, cables, etc. and be careful not to damage the cooling circuit.
- Remove all mobile parts (doors, sliding doors, glass parts, etc.) and group the various materials according to their features.
- Check the type of refrigerant on the plate positioned inside the counter; extract the refrigerant and dispose of it through authorised services.
- Disconnect the evaporator, condenser, compressor, pipes and fans. These are made of copper, aluminium, steel and plastic and should therefore disposed of separately.
- On removal of all guards and the various components from the frame, separate the different types of material making up the appliance (plastic, sheet steel, polyurethane, copper, etc.) and collect them separately.

All recyclable materials and waste should be processed and recycled by professionals, in compliance with the laws in the country in question. The company responsible for recycling the materials should be registered and certified as a waste disposal service in accordance with the country in question.

ATTENTION
Illegal disposal of the product by the owner will result in administrative sanctions as required by current laws. Disposal of the product should comply with current laws on the disposal of coolant liquids and mineral oils.

IMPORTANT
If the crossed wheelie bin sign is not present on the appliance, it means that the disposal of the product is not the manufacturer's responsibility. In these cases, current waste disposal regulations apply. Refer to the local authorities, waste disposal services or the store from where the product was purchased.

ADDITIONAL INFORMATION
Further information on the disposal of liquid coolant, oils and other substances is available on the safety data sheet corresponding to the substance itself. In order to dispose of foamed assemblies, remember that the polyurethane foams used are CFC, HFC and HCFC free.

8. INSTALLATION

This manual supplies the information necessary for correct unpacking, procedures for positioning and connection to mains electricity.

8.1 STORAGE and UNPACKING

The appliance, with or without the packaging, should be carefully stored inside warehouses or in areas away from the elements and direct sunlight, at a temperature between **0** and **+40** °C.

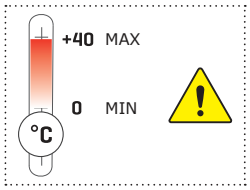

The movement of the apparatus should only be carried out using a pump or forked truck of a sufficient capacity for the weight, and moved by qualified personnel: during such operations, the apparatus must be positioned on the pallet supplied.

All packaging materials are recyclable and should be disposed of in accordance with local regulations. All packaging materials are recyclable and should be disposed of in accordance with local regulations.Please destroy "plastic" bags to prevent them from becoming hazardous to children (suffocation).

8.2 ENVIRONMENTAL CONDITIONS

ATTENTION

A dry room that can be ventilated is the suitable location for the appliance's installation. There should be a good air flow around the compressor/condensing unit.Therefore the area around the unit should not be obstructed by boxes or other objects. Place the equipment away from sources of heat (radiators, heaters of any kind, etc.) and far from the influence of continuous air movement (caused by fans, air conditioning units, etc.). If it is unavoidable to install near a heat source, use a suitable insulating plate. Also avoid exposure to direct sunlight; all of this causes the temperature inside the refrigerated compartment to rise with negative consequences on operation and energy consumption. The apparatus must not be used outside nor be exposed to rain.

8.3 ELECTRICAL CONNECTION

ATTENTION

Check that the network voltage matches the one displayed on the identification plate of the appliance, and that the power is adequate. Check on the socket that the power supply voltage provides rated voltage (±10%) when you start up the compressor. The plug should be directly connected to the electrical socket.It is forbidden to connect the plug to the socket by means of multiple socket extensions or adaptors. The plant power supply socket must be fitted with a disconnection device from the mains electricity (dimensioned to the load and in compliance with Standards in force), which guarantees complete disconnection in category III (3) over-voltage conditions and therefore protects the circuits against earth faults, overloads and short circuits. Do not route the electricity cable in passageways.

ATTENTION

Earthing is necessary and mandatory by law.

8.4 WALL MOUNTING

ATTENTION

It is fundamental to respect the distances indicated (mm) for correct installation of the appliance.

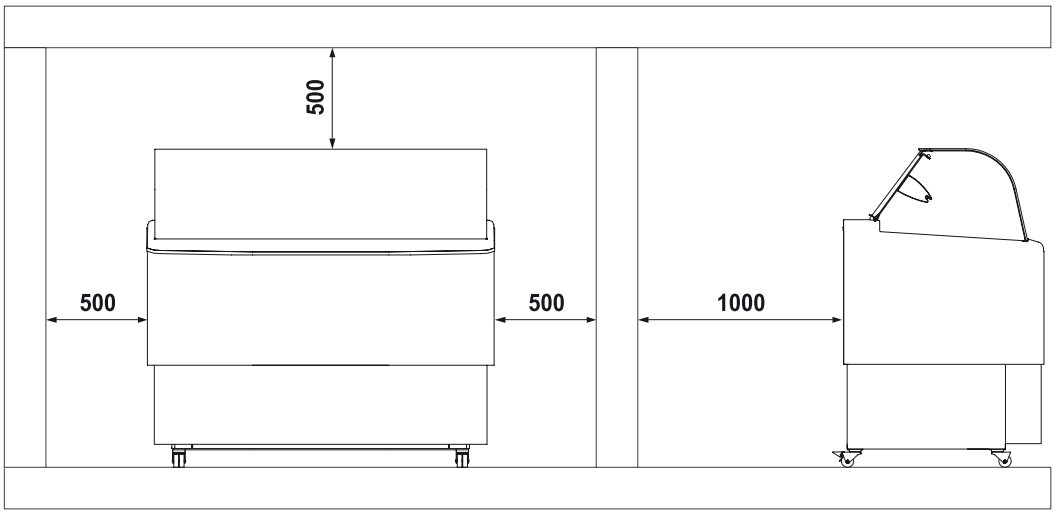

8.5 POSITIONING / HANDLING

ATTENTION

SWIVEL CASTERS

The appliance has swivel drive wheels with brake to facilitate handling.
After positioning it, the appliance must be stabilised on the floor as indicated.

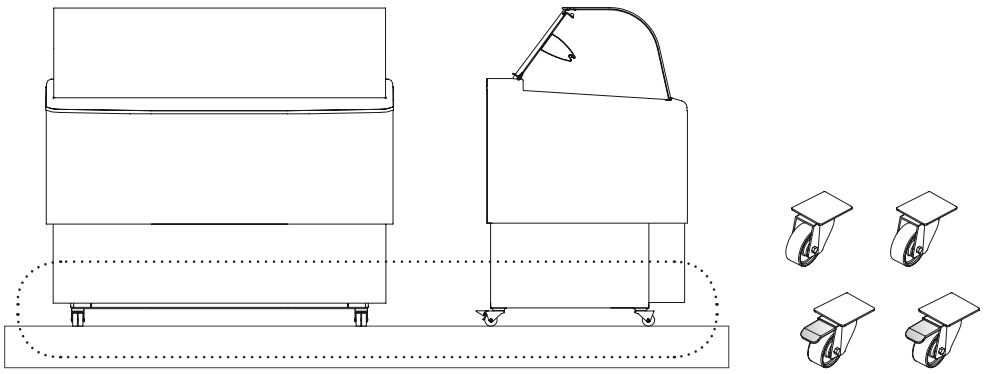

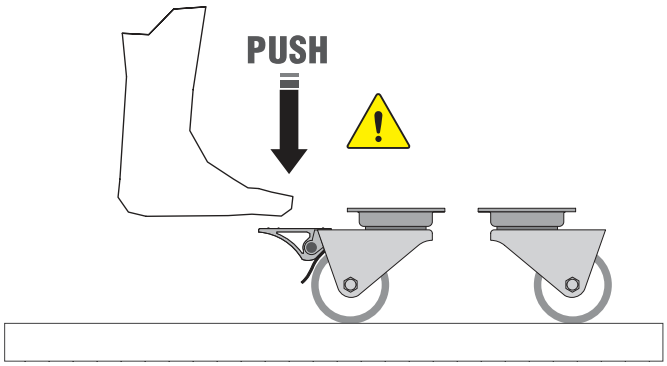

9. MAINTENANCE

The **Staff in charge of the appliance** must control and respect the expiry dates for maintenance, given in the table below, contacting the authorised **Technical Assistance** when indicated.

OPERATION	FREQUENCY				ORDINARY	EXTRAORDINARY	PERSONNEL AUTHORISED
	Depending on the Use and Necessity	Monthly	Every 6 months	Annual			
CLEANING THE EXTERNAL SURFACES	X				X		**USER**
CLEANING THE ACCESSIBLE INTERNAL PARTS (without the use of tools)	X				X		
CONTROL POWER SUPPLY CABLE, PLUGS AND / OR ELECTRICAL SOCKETS			X		X		
INTEGRITY CONTROL SEAL		X			X		
FILTER CLEANING CONDENSING UNIT (whenever present)			X		X		
CLEANING THE DEFROSTING WATER COLLECTION TRAY	X				X		**TECHNICAL ASSISTANCE**
CONDENSER CLEANING	X			X	X		
CHECK COMPRESSOR OIL LEVEL (whenever present)					X		
AIR TANK DRAINING (whenever present)			X		X		
CONTROL PNEUMATIC CONNECTIONS (whenever present)			X		X		
INTEGRITY CONTROL PIPE COOLING SYSTEM			X		X		
INSPECTION OF CABLES INTERNAL CONNECTIONS AND POWER			X		X		
CLEANING CONDENSATE DRYING SPONGES (whenever present)			X		X		
LAMP / LED REPLACEMENT (whenever present)						X	
CONTROL PANEL REPLACING (electronic control unit - thermostat - etc.)						X	
REPLACEMENT POWER SUPPLY CABLE, PLUGS AND / OR ELECTRICAL SOCKETS						X	

ATTENTION

After all maintenance it is **mandatory** to perform all electrical safety tests in accordance with the IEC EN 50106 Standard.

10. FAULTS - TECHNICAL AFTER-SALES ASSISTANCE

In the case of uncertain or non-operation, **before requesting the intervention** of the service of **Technical Assistance** perform the following controls:

THE APPLIANCE IS NOT WORKING		
CAUSE	**SOLUTION**	**PERSONNEL AUTHORISED**
Blown protective fuse	First find the cause of the trip of the switch, and then replace the new fuse.	**USER**
The master switch is open	Close the master switch.	
The plug is not inserted	Insert the plug.	
Electrical black-out	If the black-out should be prolonged, transfer the product into an appropriate cold storage container.	

THE INTERNAL TEMPERATURE IS NOT LOW ENOUGH		
CAUSE	**SOLUTION**	**PERSONNEL AUTHORISED**
Evaporator/s obstructed completely by ice	Carry out an additional defrosting cycle.	**USER**
Wrong temperature setting	Set the appropriate temperature.	
The appliance is affected by draughts or is exposed to direct or reflected sunlight	Remove any draughts and prevent any direct or reflected sunlight.	
Insufficient air flow for cooling to the condenser	Remove anything which could obstruct the circulation of air through the condenser (sheets of paper, cardboard, insufficient slots in grille, etc.).	
Internal fans at standstill or with fans damage		**TECHNICAL ASSISTANCE**
Internal ventilation is too high		
Thermostat / Electrical base unit not efficient	Replace the electronic control board. If the control unit is set up especially for must R290 refrigerant, it must only be replaced with an original replacement from ISA. Replace the temperature probes only after checking which of the two is not operating efficiently.	
Condenser unit blocked by dust or dirt in general.	Clean the condensing unit thoroughly. The air condenser or MAINTENANCE FREE, in particular heavy environments (e.g. presence of dust, the presence of excessive moisture, oiled vapours etc..) in order to avoid performance loss, needs accurate cleaning.	
Insufficient refrigerant load in the cooling system	Find the cause behind the lower amounts of coolant and eliminate it.Top up the coolant.If necessary, empty the system before topping up.	

THE COMPRESSOR DOES NOT START-UP OR OPERATES FOR A FEW MOMENTS		
CAUSE	**SOLUTION**	**PERSONNEL AUTHORISED**
No electric power supply to the appliance	Check if there is a power cut. Close the various switches on the power supply line.	**USER**
Excessively low power voltage	Check that the network voltage of the power supply cable is of a nominal value of 220V +/- 10%.	
Temperature set too high	If the temperature is higher than the air temperature in the display chamber, the compressor will not start. Set the suited temperature if the current temperature is not low enough.	
Intervention of the maximum pressure switch (where present)	Check the reasons why the pressure switch is operating at maximum pressure levels, such as: air condenser obstructed, condenser fan with air stopped, ambient temperature too high, pressure switch defective.	**TECHNICAL ASSISTANCE**

10.1 ALARM LIST (WHERE PRESENT)

ALARMS

ALARM	MEANING
P1 **E0**	Broken thermostat probe. Compressor output according to"COn" and "COF parameters
P2 **E1**	Broken evaporator probe. Set time for defrosting.
HA **HI**	High temperature alarm.
LA **LO**	Low temperature alarm.
EA **IA** **CB**	External alarm.
ETc **RTF**	Real time clock is broken.
EE	Machine parameter error.
EF	Operating parameters error

11. TECHNICAL SPECIFICATIONS

4-6-7-9-12

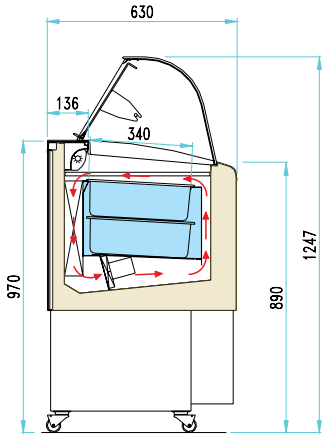

120-140

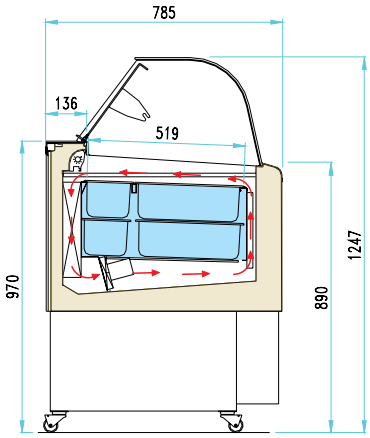

			4	6	7	9	12	120	140
External dimensions	Length	mm	824	1214	1354	1659	2119	1214	1354
	Depth	mm	630					785	
	Height	mm	1247						
Weight (net)		Kg	67	99	110	135	172	110	135

ARRANGEMENT ICE CREAM CONTAINERS

Model	**4.75** litres 260x157x170H	**5** litres 360x165x120H + Double reserve line
4	**4**	**4+4**
6	**6**	**6+6**
7	**7**	**7+7**
9	**9**	**9+9**
12	**12**	**12+12**
120	**12**	**9+9**
140	**14**	**10+10**

11.1 LIGHTING

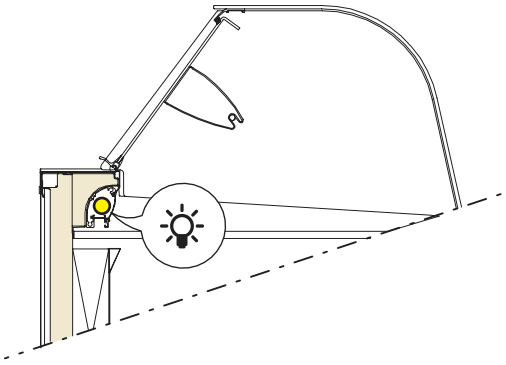

11.2 WEIGHTS

ATTENTION

It is **absolutely forbidden** to position weights as indicated.

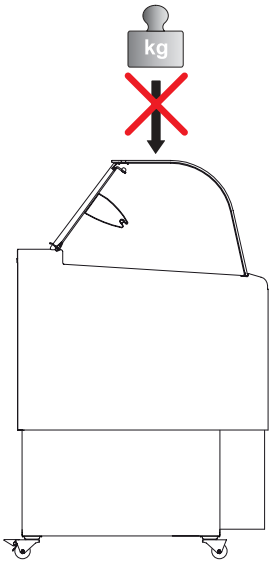

11.3 OPENING / CLOSING (OPERATOR SIDE)

TILT FLAP

ATTENTION

Ensure complete / correct closure; incomplete / incorrect closure negatively impacts on performance of the appliance with possible excessive accumulation of ice on the internal walls.

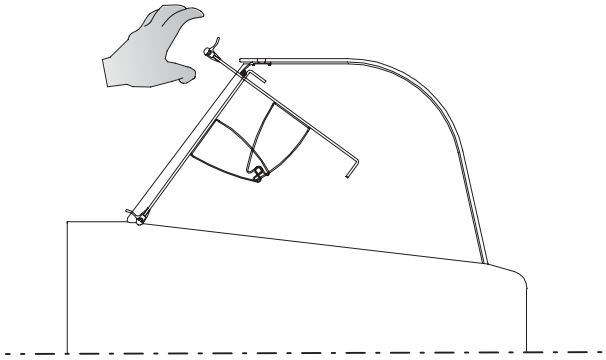

12. CONTROL PANEL

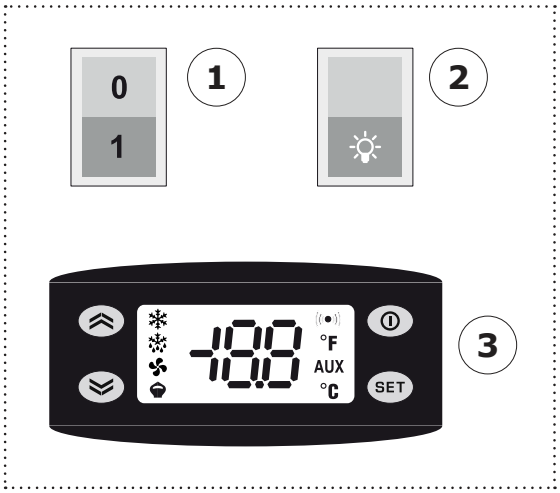

1	GENERAL SWITCH
2	LIGHTING SWITCH
3	ELECTRONIC CONTROL BOARD

START-UP (ON)

Activate the mains system master switch.
Plug the appliance in at the socket supplied by the customer, ensuring that the plug is fitted with an earth contact and that there are no multiple sockets connected to it; the equipment automatically starts.

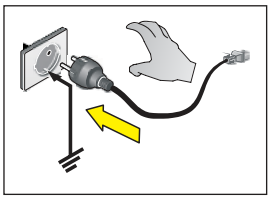

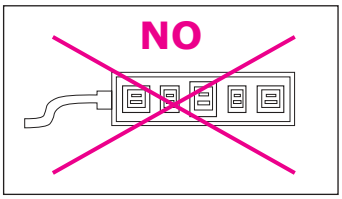

Press the main switch (**1**), the equipment starts working automatically.

SWITCH OFF (OFF)

Press the main switch (**1**), otherwise manually disconnect the power plug.

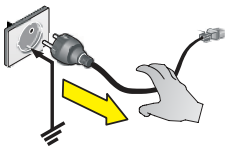

ATTENTION
The electronic control board is installed already programmed. Any changes to the control board settings can be carried out exclusively by qualified technical personnel.

12.1 USER INTERFACE EW974

KEYS	
	UP Scrolls menu options. Increases the values. Activates manual defrosting.
	MANUAL ACTIVATION OF THE DEFROSTING CYCLE To manually activate the defrosting cycle, press and hold the UP key for 5 seconds. If the conditions for defrosting are not present (e.g. the temperature of the evaporator probe is higher than the defrosting end temperature), the display will flash three (3) times to indicate that the operation will not be carried out.
	DOWN Scrolls menu options. Decreases the values.
	STAND-BY (ESC) Goes back up one level with respect to current menu. Confirms parameter value. Activates the Stand-by function. ON / OFF the equipment.
SET	**SET (ENTER)** Accesses the Set-point. Accesses the programming menu. Confirms the inputs. Display alarms (if any).
SETTING SET POINT	
SET	Press the button and release immediately. The "**Set**" label will appear. To view the Set point value, press the SET (ENTER) button again. The Set-point value will appear on the display.
	To change the Set point value, press the **UP** and **DOWN** buttons within 15 seconds.
SET	To confirm the new Set-point value set, press the SET (ENTER) key again.
	By not operating on the keyboard for more than 15 seconds (time-out)or pressing the **STAND-BY (ESC)** key once, the last value displayed is confirmed and you go back to the previous display.
LED	
	COMPRESSOR or RELAY 1 ON for compressor on. Flashing for delay, protection or blocked activation.
	DEFROSTING ON for defrosting in progress. Flashing for manual activation.
	ALARM ON for active alarm. Flashing for silenced alarm.
	FANS ON for operating fans.

13. CLEANING

The materials listed below must be cleaned as follows:

STAINLESS STEEL	Only use warm water and non-aggressive detergents and then rinse and dry using a soft cloth.
ACRYLIC OR POLYCARBONATE	Wash with lukewarm water, using a soft cloth or a chamois cloth. Do not use abrasive cloths or sponges.
CURVED GLASS	Only use products specifically designed for cleaning glass. We do not recommend using tap water, which may leave calcium deposits on the surface of the glass.

13.1 INTERNAL

ATTENTION

Do not scrape ice from the walls with pointed tools, the surface could be damaged.
Do no use high pressure appliances (e.g. steam generators).

1. Remove the product contained in the refrigerated compartment and place it immediately in a suitable refrigerated container to ensure proper storage.

2. Turn off the equipment.

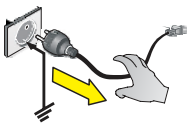

3. Remove the manually removable accessories (e.g. Sliding, grills, ice cream containers, etc.).

4. Wait at least 4 to 6 hours, until the ice on the evaporator has melted completely, before proceeding with cleaning operations. We suggest in this regard, you wait for the next day to make sure that the defrosting is thoroughly completed. Do not use mechanical devices or other means to accelerate the defrosting process, other than those recommended by the manufacturer.

5. Remove (if present) the drain plug at the bottom of the tank to drain the defrosted water. We recommend attaching a rubber tube or other suitable material in order to aid water drainage.

6. Clean the side panels and the bottom of the tank using a mild detergent, warm water and a non-abrasive cloth or sponge. Do not use sharp tools. Rinse thoroughly and dry with an absorbent cloth.

7. If the equipment was joined to a floor drain, slide lukewarm water containing a sanitising solution suited to the specific application. In terms of quantity, the amount of solution used should be enough to remove any product residues and disinfect the whole drainage channel.

8. If the equipment is not joined to a floor drain, follow the procedure referred to above. The rinse water collected in the tank will be positioned inside the base of the apparatus. Proceed to also clean and disinfect the collection tray.

9. Fit the accessories that were removed (step 3).

10. Turn on the equipment and allow to cool on the bench for at least 2 hours or until it reaches the desired temperature before reintroducing foods.

13.2 CONDENSING UNIT

Turn off the product, wait a few hours until the equipment of the condensing unit has reached a temperature near to ambient temperature.

Remove the grilles as indicated.
Clean the condensing unit using a suction brush.Clean the condenser with a soft bristle brush; make sure you do not bend the condensing unit springs whilst cleaning it.

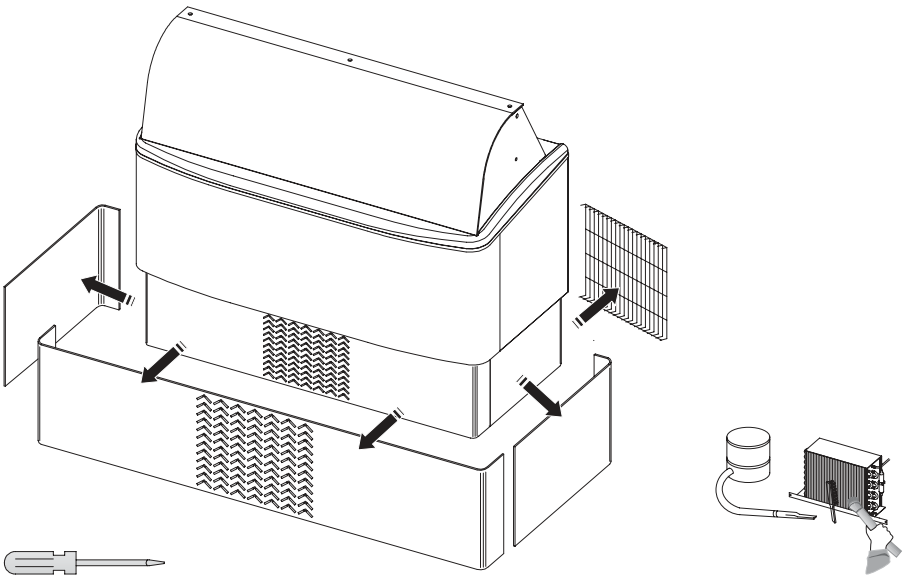

13.2 DEFROST WATER COLLECTION TRAY (IF PRESENT)

Clean based on use and as needed and in certain environmental conditions (e.g., high humidity, low environmental temperature, presence of dust, etc.) in order to avoid the incorrect and complete evaporation of the water and/or the presence of unpleasant odours.
Disinfect the tray with suitable products.

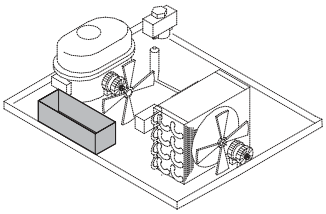

14. PROLONGED APPLIANCE SWITCH-OFF

- Remove the product contained in the refrigerated compartment and place it immediately in a suitable refrigerated container to ensure proper storage.
- Open the equipment and wait for it to reach room temperature and then clean it.
- Leave the door/sliding panels open by 2-3 cm so as to guarantee circulation of the air and prevent the formation of mould and bad smells inside the appliance.
- The equipment, whether equipped with its packaging or not, must be stored with care in the warehouse or in an area protected from the elements, atmospheric agents and away from direct sunlight, at a temperature between **0** and **+40** °C.

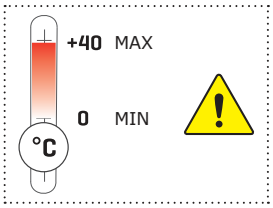

1 WIRING DIAGRAM - 412100264000

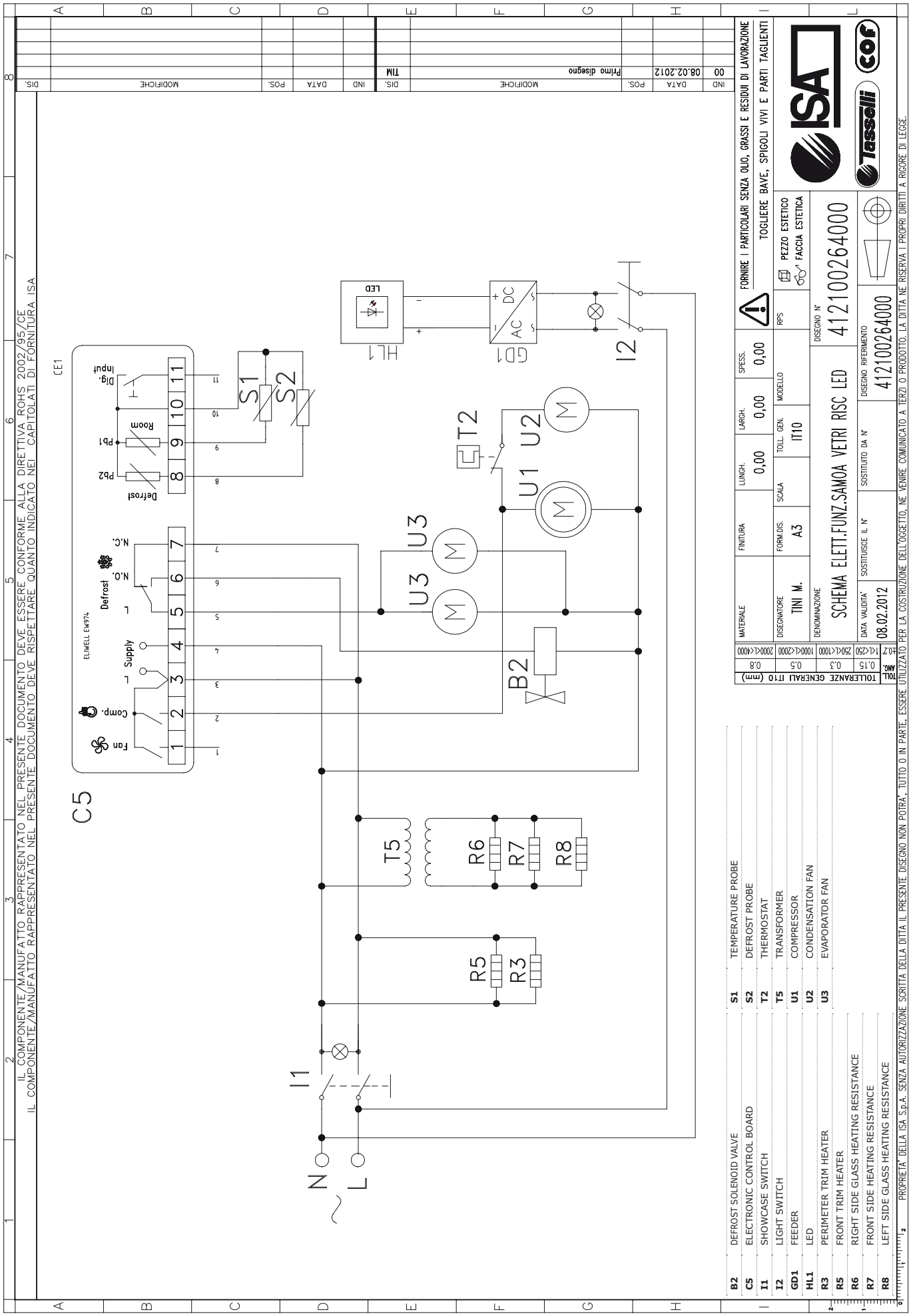

2 WIRING DIAGRAM - 412100411000

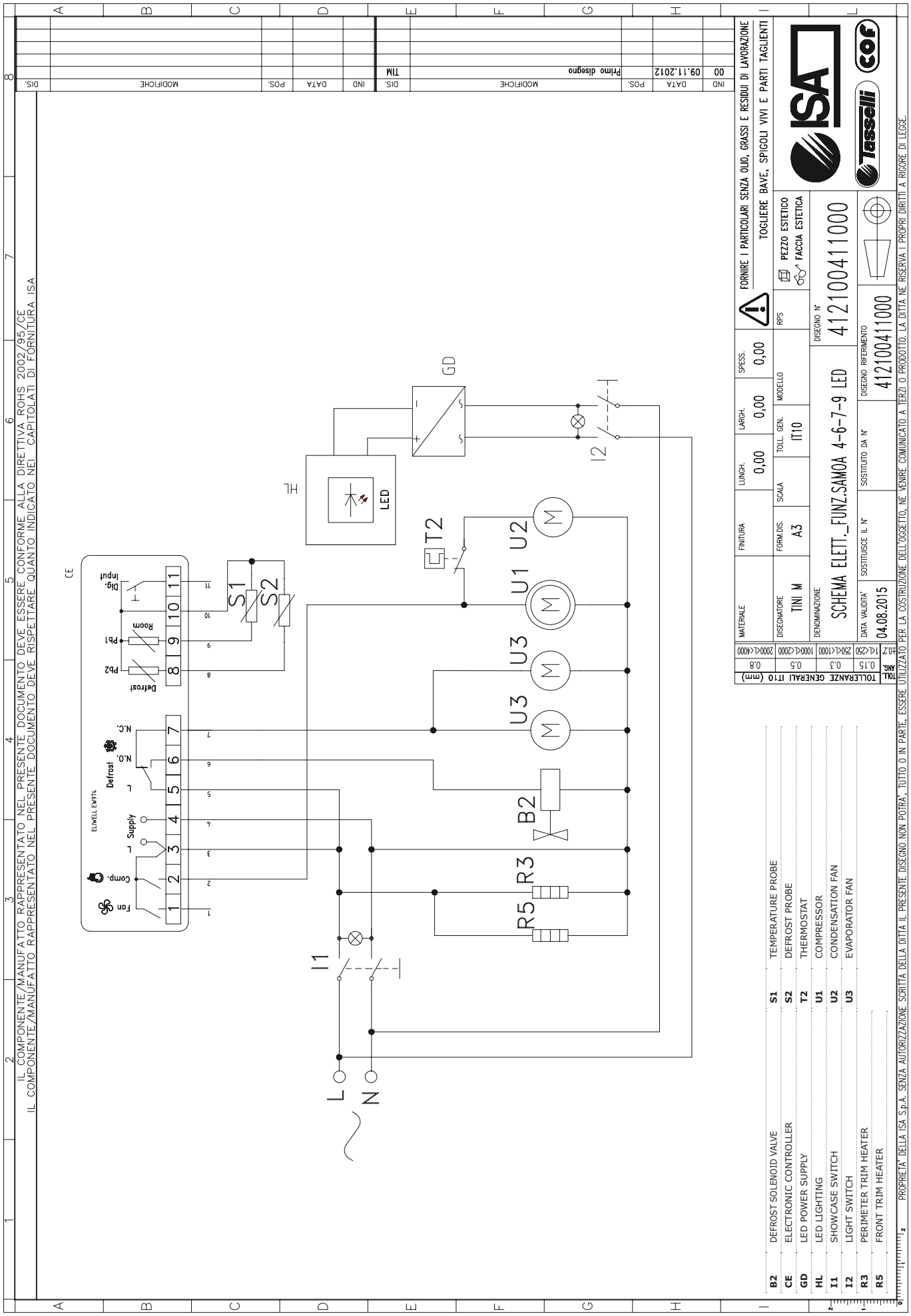

3 WIRING DIAGRAM - 412100756000

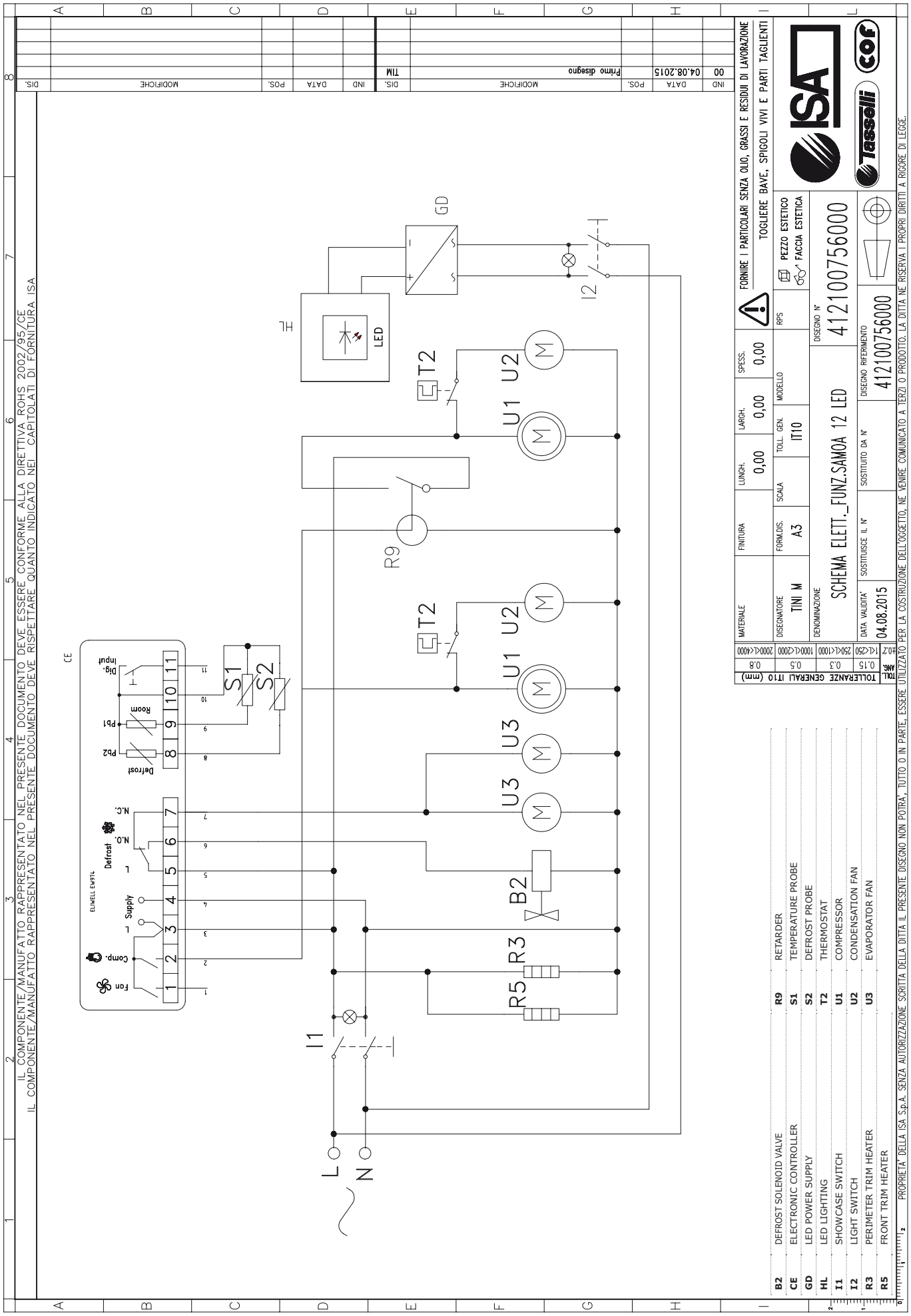

ISA